# An inexpensive circuit for beta, alpha, theta, or delta EEG biofeedback*

HOWARD I. THORSHEIM
*Saint Olaf College, Northfield, Minnesota 55057*

and

DONALD E. ANDERSON and LLOYD C. SCHULTZ
*G. T. Schjeldahl Company, Northfield Minnesota 55057*

**An inexpensive circuit is described for EEG biofeedback or measurement. The circuit is designed to interface easily with most basic EEG machines. It taps the output from a single recording channel of the basic EEG instrument and provides the following for each EEG band (beta, alpha, theta, and delta): (a) very selective bandpass discrimination, (b) variable center frequency, (c) variable threshold at which feedback will be provided, or the measurement made, and (d) use with any biofeedback stimulus or measurement device that one wishes to switch contingent with S's EEG rhythms.**

Although solid state components have brought the price of basic EEG apparatus down, feedback apparatus has remained expensive. Furthermore, the response characteristics of the few inexpensive models are not adequate for most research purposes. Typical limitations are filter circuits incapable of very selective bandpass discrimination, lack of provision for varying the center frequency, no option for setting the threshold at which feedback will be provided, a single type feedback (e.g., a tone) to which the apparatus is locked, and virtually no simple way to interface the components.

The circuit presented here was designed to eliminate such problems inexpensively. This feedback circuit can be mated to any EEG machine and its terminal relays allow lights, tones, timers, etc. to be switched in conjunction with the activation of specific EEG band frequencies (delta, theta, alpha, and beta).

In designing this circuit, the functions illustrated in Fig. 1 were isolated.

An input attenuator common to all channels permitted the use of the circuit with preamplifiers of different output levels. In our application, the output of a Narco-Bio CA-200 Physiograph "4" channel amplifier was used; this provided a high-level signal (± 30 V) superimposed on a –45-V dc level. Since the filters were designed for Gain 1 and saturate at approximately ±10 V, a variable attenuator was used to decrease the input signal to approximately ±2 V. The dc level is blocked by a capacitor at the input of the circuit.

The basic filter for each frequency consists of two new quad operational amplifiers (four operational amplifiers packaged on a single chip). A feedback circuit using three amplifier stages, with appropriate choices for resistor and capacitor values, provides a unity-gain filter with adjustable center frequency ($f_0$) and selectivity (Q). Hence, four of the quad operational amplifiers provide four separate bands, with the last amplifier stage on each chip available for isolation from the output circuit as a unity-gain isolation amplifier.

For flexibility, we wished to select a given signal level at the output of a given filter to enable a feedback signal. In order to eliminate artifacts and very short pulse activation, this circuit changes output state only if a signal level above a selectable threshold is maintained for several cycles at the center frequency or for approximately 1 sec. Thus, the circuit rectifies the output of the buffer amplifier and presents the output voltages as a dc level across a capacitor shunted by a resistor, so that the dc level can follow slowly changing signals but not individual cycles at the filter's center frequency. The dc level is compared with a second dc (threshold) level presented as a differential input of another operational amplifier, one of four in a fifth chip, for each band. The amplifier operates in high gain (without feedback), so it acts as a *switch*. The output is saturated and positive if the reference signal at the noninverting signal exceeds the second filter output and is driven to zero if the filter output applied to the inverting input exceeds the reference signal.

The output is used to switch a DPDT relay, one per band, so that a variety of output signaling devices can be energized. To provide enough current-handling capability to energize the relay coil, a single transistor is used at the output of the threshold-sensing operational amplifiers. In the mode used, this relay is normally closed when no EEG signal above threshold is sensed through the filter and opens when an above-threshold signal is detected.

The design of the bandpass filters is described as follows. Any single-stage operational amplifier with input impedance $Z_i$ and feedback impedance $Z_f$ has an output voltage whose amplitude and phase are described by Eq. 1

$$E_0 = -(Z_f/Z_i)(E_i) \qquad (1)$$

as illustrated in Fig. 2. If one could easily obtain the values of inductance L and capacitance C, the circuit of Fig. 3 would have the output/input relationship described in Eq. 1, but with the complex impedance of the feedback circuit given by Eq. 2.

$$Z_f = 1/[(1/j\omega L_0) + (j\omega C_0) + (1/R_Q)], \qquad (2)$$

*This work was supported in part by National Science Foundation Grant GY-6887.

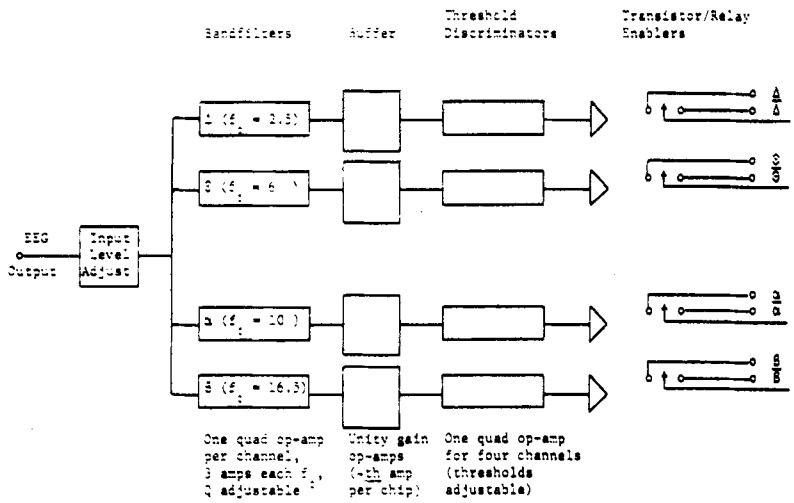


Fig. 1. Basic circuit concept for a four-band system.

where $\omega = 2\pi f$. Equation 2 can be rewritten as Eq. 3.

$$Z_f = R_Q/\left\{1 + jQ[(\omega/\omega_0) - (\omega_0/\omega)]\right\}, \qquad (3)$$

where $\omega_0 = 1/\sqrt{L_0 C_0}$ and $Q = \omega_0 R_Q C$.

This is the most convenient form for recognizing the salient features of a pass-band filter; the center frequency gain (at $f = f_0$) is $A_0 = -R_Q/R_i$, and the gain falls off both above and below $f_0$ in a normalized form. Such a filter response can be characterized rather conveniently in terms of the lower half-power frequency $f_\ell$ and the upper half-power frequency $f_h$. At each of these frequencies $|E_0|$ has decreased to 0.707 of the value of $|E_0|$ at the resonant frequency $f_0$. It can be shown that $f_0$ should be set at $f_0 = (f_h + f_\ell)/2$, and Q should be set at $Q = (f_\ell + f_h)/[2(f_\ell - f_h)]$ to fit the desired bands.

The actual feedback circuit used is illustrated in Fig. 4. Brandt (1972) has shown that the output response for this circuit is the same as that shown in Fig. 3, if the following relations are made: $L_0 = R'R_fC'$; $C_0 = C_1$; $R_Q = R_1$.

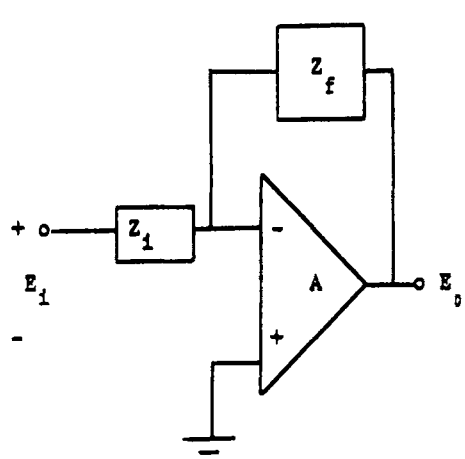


Fig. 2. Simple negative feedback amplifier stage.

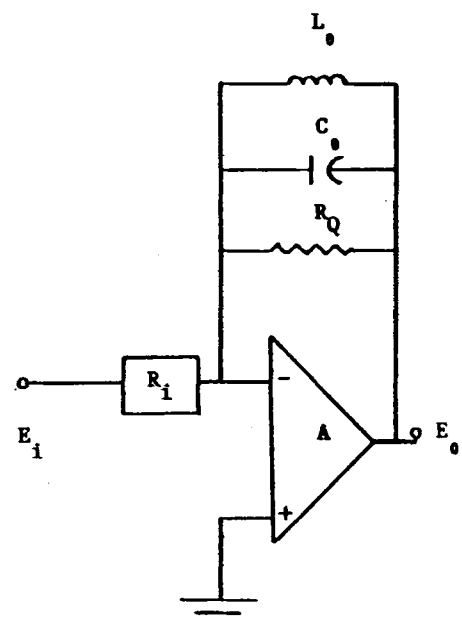


Fig. 3. Resonant circuit feedback stage.

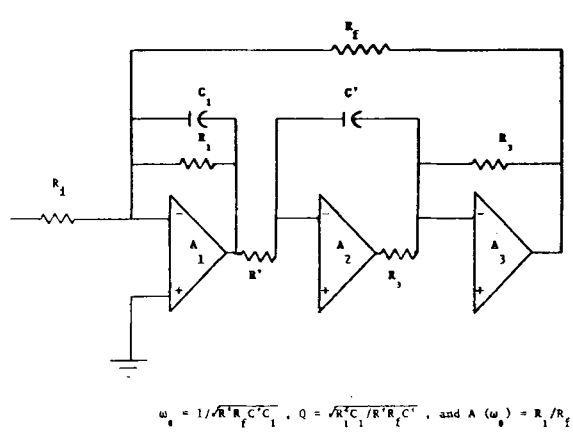


Fig. 4. Bi-quad active filter.

A detailed design of any given filter can now be undertaken, given a choice of center frequency ($f_0$) and selectivity Q (or $\delta f = f_h - f_\ell$). For this application, it was desired that R′ (which sets the center frequency) and $R_1$ (which sets Q or $\delta f$) should be adjustable potentiometers so that different values could be set during use. Thus, for each of the four bands, $f_\ell$ and $f_h$ were first selected. The values selected for the four EEG bands are presented in Table 1. The values selected set the design center value of $f_0$ and hence R′ for each filter and of $R_1$ (from $f_\ell$ and $f_h$). However, setting $R_1$ from the values of Table 1 would restrict the sensitivity to that which would decrease |E| to 0.707 of midband at either band edge, that is, a 3-dB drop. More sensitivity might demand that, for example, a 20-dB drop be set at $f_h$ and $f_\ell$, that is, as shown in Eq. 4.

**Table 1**
**Filter Frequency-Response Limits**

| Filter | | $f_\ell$ | $f_h$ |
|---|---|---|---|
| Delta | (Δ) | 1 | 4 |
| Theta | (θ) | 4 | 8 |
| Alpha | (α) | 8 | 12 |
| Beta | (β) | 13 | 20 |

**Table 2**
**Design Values for 3-dB and 20-dB Drop-Off at Band Edges**

| Filter | $f_0$ | $Q_3$ (3 dB) | $Q_{20}$ (20 dB) | C (μF) | R′ (K) | $R_1$ ($Q_3$) (K) | $R_1$ ($Q_{20}$) (K) |
|---|---|---|---|---|---|---|---|
| Delta | 2.5 | 0.83 | 8.29 | 1.0 | 63.7 | 53 | 1318 |
| Theta | 6.0 | 1.5 | 14.93 | 0.5 | 53.0 | 79.5 | 1187 |
| Alpha | 10.0 | 1.25 | 12.44 | 0.25 | 63.7 | 79.6 | 990 |
| Beta | 16.5 | 2.36 | 23.5 | 0.1 | 96.5 | 228 | 2879 |

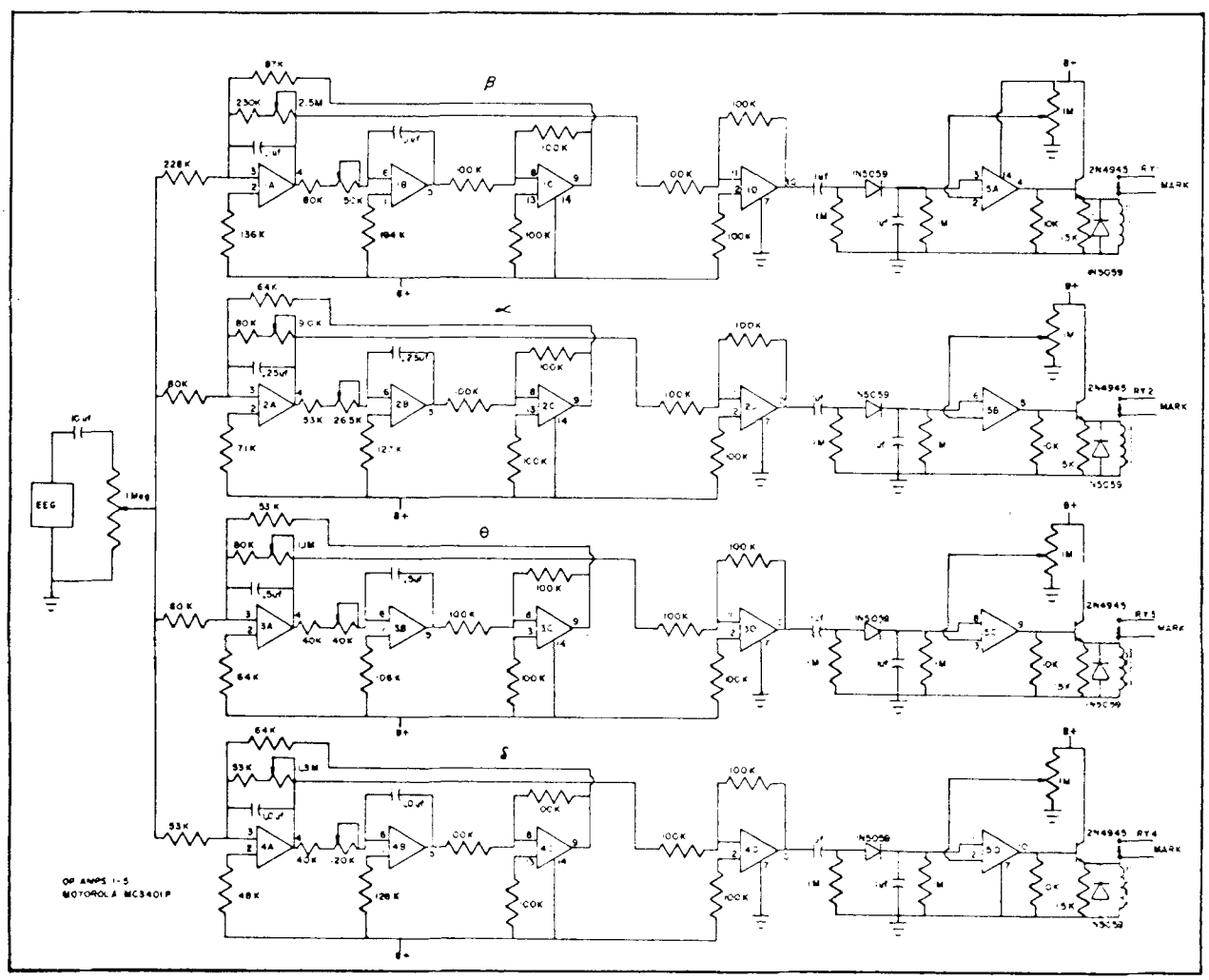


Fig. 5. The complete circuit.

Table 3
Parts List and Costs

| Design Values | Values Used | Quantity | Unit Cost | Total Cost |
|---|---|---|---|---|
| 1 meg | 1 meg | 9 | .22 | 1.98 |
| 228 K | 220 K | 1 | .26 | .26 |
| 230 K | 230 K | 1 | .26 | .26 |
| 97 K | 100 K | 1 | .26 | .26 |
| 136 K | 150 K | 1 | .26 | .26 |
| 80 K | 82 K | 5 | .22 | 1.10 |
| 50 K | 47 K | 1 | .26 | .26 |
| 194 K | 220 K | 1 | .26 | .26 |
| 100 K | 100 K | 24 | .22 | 5.28 |
| 10 K | 10 K | 4 | .26 | 1.04 |
| 1.5 K | 1.5 K | 4 | .26 | 1.04 |
| 64 K | 68 K | 3 | .26 | .78 |
| 71 K | 68 K | 1 | .26 | .26 |
| 53 K | 47 K | 4 | .26 | 1.04 |
| 26.5 K | 27 K | 1 | .26 | .26 |
| 127 K | 150 K | 1 | .26 | .26 |
| 40 K | 39 K | 2 | .26 | .52 |
| 106 K | 100 K | 1 | .26 | .26 |
| 128 K | 150 K | 1 | .26 | .26 |
| 10 μF | 10 μF | 1 | .72 | .72 |
| .1 μF | .1 μF | 2 | .54 | 1.08 |
| 1.0 μF | 1.0 μF | 10 | .51 | 5.10 |
| .25 μF | .25 μF | 2 | .21 | .42 |
| .5 μF | .47 μF | 2 | .21 | .42 |
| 1 meg pot | 1 meg pot | 4 | 1.95 | 7.80 |
| 2.5 meg pot | 1 meg pot | 1 | 1.95 | 1.95 |
| 910 K | 1 meg pot | 1 | 1.95 | 1.95 |
| 1.1 meg pot | 1 meg pot | 1 | 1.95 | 1.95 |
| 40 K pot | 50 K pot | 1 | 1.95 | 1.95 |
| 1.3 meg pot | 1 meg pot | 1 | 1.95 | 1.95 |
| 120 K pot | 200 K pot | 1 | 1.95 | 1.95 |
| 1N5059 | 1N5059 | 8 | .36 | 2.88 |
| 2N4945 | 2N4945 | 4 | .40 | 1.60 |
| MC3401P | MC3401P | 5 | 1.10 | 5.50 |
| 12 V relay | 12 V relay | 4 | 3.25 | 13.00 |
| Vector board | | | | 9.00 |
| Total Cost | | | | $74.86 |

$$|E/E_0|_{f_h, f_\ell} = 0.1(E/E_0)_{f_0} \quad (4)$$

As a consequence, design values were determined both for 3- and 20-dB drop-offs at the band edges. Values for the four bands are presented in Table 2.

The final circuit must, of course, make selected compromises with available resistor and capacitor values. In addition, bias circuits must be applied to the noninverting inputs to set the operating points of each operational amplifier stage near the middle of its dynamic range (half of the single-ended power supply voltages).

The circuit shown in Fig. 5 represents the embodiment of all of the functions shown earlier in Fig. 1. Each of the bands can be tuned over the center frequencies from $f_\ell$ to $f_h$. The selectivity of the channel (Q) can be adjusted to reject band-edge voltage amplitudes 10 times the center sensitivity.

Choice of time constant in the discriminator sections (filter output) is around 1 sec. This time constant can be varied by increasing or decreasing the resistor in parallel with the capacitor input to the final operational amplifier.

The circuit was fabricated using Motorola MC3401P quad operational amplifiers. A substitution on a pin-for-pin basis is the National Semiconductor LM3900 quad operational amplifier. Total parts cost, at unit quantities, for all four bands as shown in Fig. 5 is $74.86. A total parts list, together with unit costs, is presented in Table 3.

## REFERENCES

Brandt, R. Active resonators save steps in designing active filters. Electronics, April 24, 1972, 106-110.

(Received for publication July 3, 1973;
revision received October 24, 1973.)