Technol Econ Smart Grids Sustain Energy (2018) 3: 6
https://doi.org/10.1007/s40866-018-0043-z

ORIGINAL PAPER

Fog Computing for Next Generation Transport- a Battery Swapping System Case Study

Md. Muzakkir Hussain[1] · M. Saad Alam[1] · M. M. Sufyan Beg[1]

Received: 30 December 2017 / Accepted: 22 April 2018 / Published online: 11 May 2018

Abstract

Electric vehicle (EV) is a promising technology for reducing environmental impacts of road transport. Efficient EV charging control strategies that can affect the impacts and benefits is a potential research problem. Adopting the notion of IoT, in this paper, we present a Cloud-Fog based Battery Swapping Topology (BSS). A QoS ensuring timing model is proposed for defining the charging management of EV batteries across the BSS. For optimal BSS infrastructure planning, we also present a cost optimization framework, considering the timing and architectural constraints. The potential solution approaches for the given optimization formulation is also discussed.

Keywords Battery swap station (BSS) · Big data analytics · Cloud computing · Fog computing · Internet of things (IoT) · Intelligent transportation system (ITS)

Introduction

Due to rise in environmental pollution, degrading ambient air quality, escalating number of IC engine vehicles and rise in the carbon footprint from the conventional vehicles, the focus of entire research and automotive industry is toward implementing smart, sustainable and secure modes of transport [1]. Such issues compel nations to anticipate heavy investment, for green electric vehicles (EV) uptake, in the forthcoming years. The rollout of EVs accumulates heavy investments and R&D efforts from transportation electrification sector. Currently, it became a center of commotion in automotive industry [2]. Preliminary research threads estimate that by 2020, the size of EV population will range to five million in China while by that time it will constitute at least one tenth of US vehicle fleet [1]. It had also been anticipated that by the end of the decade, the EV will contribute to 25% of market share in these nations [2]. A properly planned EV fleet can also act as a temporary energy source for smart grid in the demand side and will enhance the efficiency of smart grid frequency control [3]. Such EV enabled transportation as a service (TaaS) paradigm will establish secure and hassle free commuting services for the urban folks.

Despite the evidence of its positives, there are still some downsides of plug-in EVs. This urges the developers and utilities to contemplate on, before they adjudicate to invest in electric car rollouts. The contemporary EV load creates energy management silos due to scarce availability of recharging points/sockets, coercion on back-end energy grid, longer recharging delay, and high upfront costs. The less charging delay requirement makes rapid charging stations or battery swap stations more preferred Above all, a major cause that decelerates EV adoption is the innate Electric Vehicle Range Anxiety (EVRA) that persists in a considerable percentage of EV users. It is syndrome where an EV user is driven by fear that his battery may be depleted before the completion of trip. Preliminary estimation suggests that the length of nearly a half of EV user's routine trip is greater than their full-electric-range. Also, it is very difficult to implement centralized charging/discharging control under the plug-in mode due to the stochastic charging profile of EV users. Some distributed and stringent strategies are still required to avoid uncontrolled charging. A distributed control strategy will ensure controlled EV fleet management, lower the peak load and improves system security. Thus, EV advocates have

✉ Md. Muzakkir Hussain
MD.MUZAKKIRHUSSAIN@ZHCET.AC.IN

[1] Faculty of Engineering and Technology, Aligarh Muslim University, Aligarh, UP India

spent decades tackling all these challenges. However, EV charging control strategies which can affect the impacts and benefits significantly are still under discussion.

An alternate strategy based on a battery swap station (BSS), has been proposed and received increasing concerns in recent years [12–14]. Here, the EV batteries are leased to users. The unique feature of BSS strategy is that EV batteries can be replaced within a short time and can be charged during off-peak periods in swap stations. Doing so, the challenges discussed above could be solved correspondingly. Moreover, the charging of batteries is centralized during the night when the charging cost is low. Other salient of features of BSS include: the provision of grid support service in a centralized charging and discharging manner, the ability for drivers to resume their journeys in minutes with a full-capacity battery, the charging of batteries in slow-charging mode to extend their lifetime, and the savings in cost of EVs by providing batteries by operators etc. Contrast to conductive charging through charge points in battery charging stations (BCS), the BSS offers one major advantage i.e. prompt charging. It's an effortless undertaking where the EV driver just drives to a swapping station, steers on a platform, battery is autonomously swapped, transaction done and drives away in a span of minutes. The whole swapping job in a BSS gets done in less than five minutes through a robotic shuttle that unplugs the depleted battery from rear/front/underside of the car [5].

In the age of intelligent transportation (ITS), the electric vehicles that are being released into the current fleet are blessed with intelligent sensors, devices and smart service applications and utilities. The integration of electric vehicles into advanced information and communication technologies (ICT) have now allowed it to act not just as a standalone passive nodes but has now evolved into an active entity [3]. New EV versions are smart, secure and a potential source of Big-Data analytics. Moreover, such vehicle fleet needs efficient infrastructures where its monitoring and coordination can be under autonomous control. The EV fleet requires data driven real-time decision making framework where the dynamism of the infrastructure can be engrained and enable the EVs to confront every adversary that emanates on its way.

Motivated by the above listed distinguished features, in this work we proposed an IoT based framework for optimally configuring a BSS network. The functional modules of a typical cloud-fog controlled BSS is explained in detail. Then we present a timing model for optimal switching of vehicle batteries (VB) among the incoming vehicle load. We also propose an optimization framework, considering the participation of BSS in decentralized energy markets. We then propose a fog based BSS framework and highlight the potential challenges of executing such framework(s). The key contributions of this work are outlined as

1. Presented a Cloud-Fog based BSS architecture that works under IoT paradigm.
2. Proposed a timing model for EV fleet management, guaranteeing least queuing delay and Quality of Service (QoS).
3. Proposed an optimization framework for infrastructure planning of smart electric vehicle battery swapping stations (BSS).

The manuscript is organized as follows. In "Related Works and Motivations for Proposed Framework", we present the related literatures in BSS deployment. In "Architecture of Cloud-Fog Based Battery Swap Stations (BSS)", the architecture of Cloud-Fog based BSS is proposed. "Timing Model for BSS" provides the timing diagram for optimal operation of BSS. In "Cost Optimization Framework for Battery Swap Station (BSS)", an optimization framework is proposed, considering the timing and architectural constraints. "Conclusion" concludes the manuscript.

Related Works and Motivations for Proposed Framework

Though there exist rigorous research and development efforts related to smart EV swapping infrastructures, but as of now all such inventions execute in silos [4]. In [5], a framework based on cost benefit analysis was presented in order to have an optimal design of battery swap stations. Correspondingly they also suggested empirical evidences where the performance of battery swap stations outperforms the plug in charging methodologies. However it doesn't explain the computational and tractability issues that will arise due to heavy uptake of EVs. As the incoming EV flux is increasing exponentially, there is a strong urge to have an architecture where the candidate swapping or charging stations are uniformly distributed. The network kernel of BSS is to be intelligently programmed to guarantee the QoS requirements. Heavy adoption of EVs would strain the power grid, thus the BSS web should be organized properly to coordinate the charging facilities. A game theoretic model based routing scheme was developed in [6] where a less busy station through price incentives attracts vehicle crowd, thereby creating an load balanced environment in the whole network.

At its inception in Europe, 17 battery swapping stations were installed in Denmark in 2011-2012 which constitute a portion of BetterPlace infrastructure [7], a billion dollar initiative undertaken by Israel entrepreneur Shai Agassi, which had to suffer its unfortunate bankruptcy in 2013 [8]. The idea was to operate network of Battery Swap Stations

(BSS) where the depleted batteries will be replaced with a fresh and full battery within a few minutes time horizon. Though its idea of leasing EV batteries seems nifty, it could release barely 1500 cars into the fleet, and that so by burning a voracious capital of nearly one billion dollars [9].

Although dozens of discussions, articles and views dueled to settle a consensus regarding the reasons that surrounded Better Place's failure to make economically viable roll-outs, the prominent reasons for its bankruptcy may be concluded as (1) Its cell phone like subscription model i.e. the cars are designed plug only in company owned charging stations. (2) Less flexibility i.e. models and styles of cars may disdain the executive class and (3) Space constraints for BSS installation (4) Battery exchange substructure may be unreliable & untrustworthy. But, its visionary innovation of electric powertrains rollout and it ultimate liquidation remains a global sensation & trove of lessons for the automotive research and development community toward electrified and sustainable transportation. China was already involved in the invention since 2008 [10] and soon after the end of BetterPlace it has geared up its efforts toward BSS deployment and demonstrated numerous prototypes for its cities. In 2010 Shanghai-China Expo, battery swap station mechanism was first simulated on large scale, which consists of 120 electric busses running on three routes [11]. Chinese policy makers have started signing joint ventures for electric vehicle infrastructures with other nations for running integrated swapping business. Recently, it came in the Jerusalem Post that a Chinese OEM "Bustil" signed a deal with an Israeli company that was previously involved in supplying automation utilities for BetterPlace, and decided to develop about seven thousand BSS in Nanjing, a city in eastern china that have nearly same population as that of whole Israel [12].

Despite the fact that policy makers, R&D's and automotive industries are advocating numerous projects and schemes to launch the widespread adoption of electric vehicles, the deployment of BSS still seems to be a fantasy for countries like India, Malaysia etc. where the notion of smart city is in its emergence. Though China seems undertook the first step toward commercial deployment of BSS [10], the infrastructures are still far from maturity and the deployed BSS infrastructures are still confined to specific expanses. For having a global infrastructure that can operate the fully electrified fleet, a strong business model is the need of hour, else otherwise the fate might be what happened to Shai Agassi's BetterPlace [8, 13] or it may be give up at the interim as hinted by Tesla in 2015 [14].

Though ideal research works addressing the successful rollout of swapping paradigms is still remote but there exists few but not enough attempts that focused on localized threads of such technologies. Some focus on optimizing the infrastructure related cost [15–17], few literatures gave emphasis on guaranteeing the major QoS parameters within acceptable limits [6, 18, 19], market and business uncertainties are also taken into account in some works [5, 20], coupling renewable services to BSS [21], BSS energy management [22, 23], and many more. Optimal distribution of EV penetration as well routing strategies of BSS networks is also studied in some works [24, 25]. Traces of research efforts associated with efficient charging scheduling of EV batteries in battery swap stations have also been found as in [26, 27]. But a unifying framework that exhaustively encompasses all the issues that may arise while attempting to set up a viable infrastructure considering whole of abovementioned attributes is the need of tomorrow. Analyzing the business cases, market models, approaches and lessons from bankruptcy of BetterPlace [8] and success of BSS in Chinese market [28] and examining the demography of metropolitan fleet, it reveals that a comprehensive business model for battery swapping techniques would guide transportation sector to a new horizon having minimum pollution, minimum traffic/congestion, noise free transportation and that so in a cost effective manner.

In the age of intelligent transportation (ITS), the electric vehicles that are being released into the current fleet are equipped with intelligent sensors, devices and smart service applications and utilities [29]. The integration of EVs into advanced information and communication technologies (ICT) have no allowed it to remain a standalone entity, but has now evolved into an active entity. New EV versions are smart, secure and a potential source of Big-Data analytics. Moreover, such vehicle fleet needs efficient infrastructures where its coordination can be under autonomous control. The fleet requires data driven real-time decision making framework where the dynamism of the infrastructure can be engrained and enable the EVs to confront every adversary that emanates on its way.

Architecture of Cloud-Fog Based Battery Swap Stations (BSS)

A BSS warehouse can act as a power supplier not only for the EVs but can also actively participate in mitigating miscellaneous power demands and regulation services thereby maintaining load equilibrium in the whole power system. The BSS has dedicated interfaces that ensure seamless exchange of energy to and from power sources such as smart grid, micro gird, EVs etc. Thus, a BSS model proves to be multi-tenant in having active role in diverse modes of power trading such as V2B, B2V, B2B, B2G, G2B, R2B, B2R etc. where letters V, B, G and R is acronym for EV, BSS, smart grid and renewables

respectively. Figure 1 shows the topology of a typical BSS, its interaction with various power sources and its participation in decentralized energy markets.

The IoT aided BSS framework comprises of terminal data gathering module, monitoring sub-system, management modules for coordinating the operation of a cluster of BSS collocated to it. The terminal data collecting module carries out real-time tracking, identification, state information collection and dynamic orientation of EV fleets on a terminal device through the interconnected mesh of sensors, actuators, RSUs and other transportation telematics, transmits it to the battery charge/swap station monitoring subsystem through dedicates wired links. It synthesizes and transfers the status of the operating state and orientation to the regional monitoring device through wireless IoT sensor network. The analytics modules deployed at the BSS/BCS site acts on such data to carry out metering and billing procedures.

Further, it also offloads the transaction data to the regional data centers for historical and bulk analytics. The regional monitoring cloud monitors the terminal devices and the battery charge/swap stations in its jurisdiction area, and prepares statistics on the EV routing behavior, metering and billing transactions, driving profiles etc. Such cloud level analytics enables the system to learn and evolve according to the fleet penetration, thus ensuring a reliable and effective management of whole infrastructure. Figure 2 embodies a structural layout and control flow of an IoT aware Smart EV battery swapping/charging framework.

In this section we explain how to integrate Cloud-Fog computing technologies into a Battery swap Station and what functionalities ad protocols need to be defined for a viable deployment of proposed model. As shown in Fig. 2,

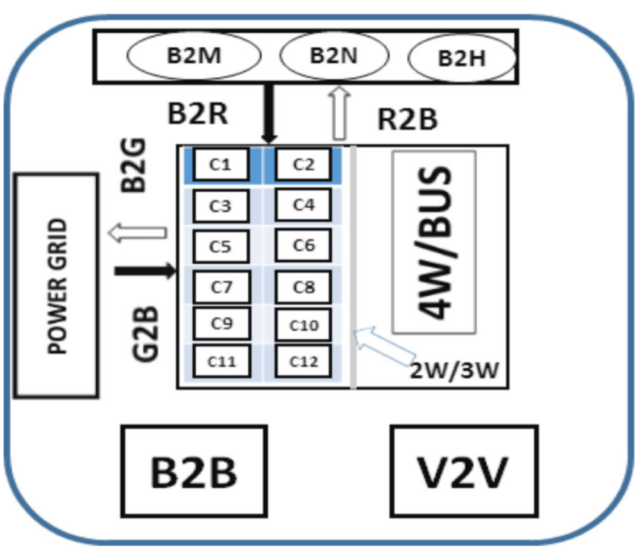

Fig. 1 Topology of a typical Battery Swap Station (BSS) its interaction with various power sources and its participation in varying markets

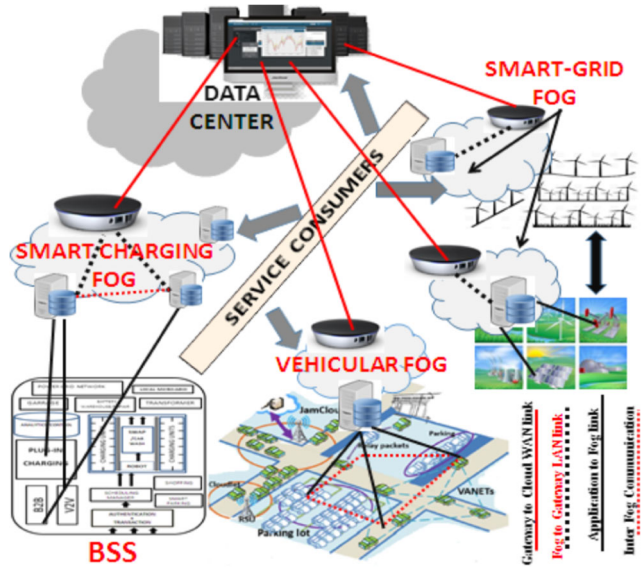

Fig. 2 Cloud-Fog architecture for intelligent Battery Swap Station (BSS)

there is a granularization and distribution of tasks among the fog nodes as well as the distributed data centers. Each of these micro data centers (Fog Nodes) execute the latency-critical and light weight tasks and offload bulky analytics activities to the remote data centers [30]. However, robust protocols and standards need to be defined to synchronize the flow of control and information across the layers of Fog based BSS architecture. The data that needs historical analysis and long term storage are dispatched to global data centers via fog-cloud WAN communication interfaces. Fog Nodes (FN), implemented at the edge of network, provide highly virtualized platform for compute, storage, and networking services between IoT end points and cloud data centers. In contrast to centralized cloud services, FNs are targeted to serve the BSS consumers with geo-distributed deployments [31].

A BSS offers a rich use-case of fog computing. Consider an IoT aided BSS architecture, where we have a large-scale, geographically distributed micro-grid as shown in Figure (e.g. wind farm) system populated with thousands to millions of sensors and actuators. This system may further consist of a large number of semi-autonomous modules or sub-systems (turbines). Each subsystem is a fairly complex system on its own, with a number of control loops. Established organizing principles of large-scale systems (safety, among others) recommend that each subsystem should be able to operate semi-autonomously, yet in a coordinated manner. For that, controller with global scope, implemented in a distributed way may be employed. The controller builds an overall picture from the information fed from the subsystems, determines a policy, and pushes the policy for each subsystem. The policy is

global, but individualized for each subsystem depending on its individual state (location, wind incidence, conditions of the turbine). The continuous supervisory role of the global controller (gathering data, building the global state, determining the policy) creates low latency requirements, achievable locally in the edge centered deployment also known as the Fog. Such system generates huge amounts of data, much of which are actionable in real time. It feeds the control loops of the subsystems, and is also used to renegotiate the bidding terms with the ISO whenever necessary. Beyond such real-time network applications, the data can be used to run analytics over longer periods (months, years) and over wider scenarios (including other wind farms or other energy data). The cloud is the natural place to run such batch analytics. The SG requires a store and computing framework leveraged with efficient communication network connecting the subsystems, the system and the Internet at large (i.e. cloud). Figure 3 shows the functional modules for a fog regulated BSS network.

The whole architecture can be broadly delineated into three modules, each having a number of sub-modules having distinctive functionalities. As shown in the Figure, there are three key modules, each forming pairwise interfaces. Each of these communication interfaces generates massive volume of data. The swapping station (BSS) is designed not only to provide charged batteries to incoming EVs but its operation is extended to perform diverse roles, viz. as an aggregator, as a mobility manager, or an intelligent system, etc. Figure considers a two tier BSS architecture for rendering its operation mechanism. The modules at the inner tier are for the internal operations of BSS while the outer layer performs control operation of inner entities. Here the functionalities of a BSS is modularized into multiple units, are regulated by Swap Station Administrator (SSA).

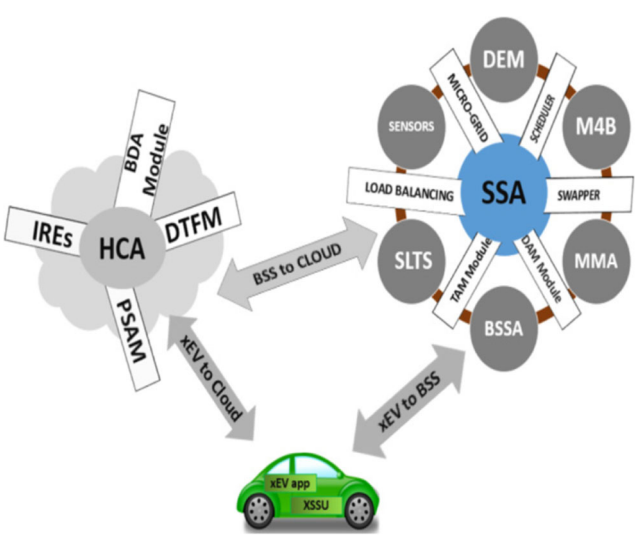

Fig. 3 Functional modules for a Cloud-Fog Regulated BSS network

Within a BSS the scheduler schedules the plugging of batteries into charger. The scheduler is also responsible for assigning priorities to EV batteries when and where necessary. The scheduling of batteries into corresponding EVs are intelligently programmed through the FNs, ensuring reliable, consistent and risk free operation of the BSS. The swapper consists of swapping robot, swapping lane and skilled workers. The day ahead (DAM) and term ahead (TAM) modules leverages the BSS to participate in the ancillary market. The forecasted day ahead market demands are utilized by TAM for enabling the BSS to actively participate in the auxiliary energy services. The BSS is also equipped with micro-grid farms for utilizing the intermittent distributed generation services. Besides, there is also a load balancing module that shapes the power surges at critical and peak times. The mobility management unit (MMU) specifies the standards and protocols for the communication interfaces. It enforces the scheduling strategies for BSS scheduler.

Timing Model for BSS

In this model, we consider the delays associated to both EV battery as well as the vehicles. Each battery in the BSS is assumed to be in one of three states namely charging, waiting or full, while each vehicle will be in one of the states namely swapping, waiting and swapped. The timing sequence of both EV and VB may not be synchronized. This leads to a vehicle to wait in queue. For designing the timing model of EVs and batteries in varying states, we consider four scenarios at the beginning of day.

Case 1 Customers buy batteries while buying the EVs, all batteries at BSS is empty.

Case 2 Customers buy batteries while buying the EVs, all batteries at BSS is full.

Case 3 Customers don't buy batteries while buying the EVs, all batteries at BSS is empty.

Case 4 Customers don't buy batteries while buying the EVs, all batteries at BSS is full.

Suppose that the BSS owner buys N batteries and k chargers at startup. Obviously this may or may not be sufficient to satisfy the EV load at any instant Δt. When a vehicle arrives, it dispatches the empty battery with the full one thus adding numbers to the batteries waiting to be charged. If each battery takes $n\Delta t$ time to fully charge a battery, then after each $n\Delta t$ time k full batteries will be released. Within the duration if a vehicle arrives it will add up to the number of batteries waiting to be charged, while

the increase in the number of waiting vehicles is decided on whether the number of arrived vehicles is greater or less than the number of available full batteries.

Timing Model for Vehicle Battery (VB)

At the first $\Delta t = t_1$, suppose there arrived n_1 number of vehicles. For case 1 since the batteries in the BSS are empty, the vehicles need to wait for time T_c, to get the batteries full. Assuming $n_1 < N_{ch}$, the number of batteries in the charging state will be n_1. For case 2, since the batteries were initially kept full, they will be swapped, thus no vehicle will be in the waiting state, rather the number of vehicles in the swapped state (ready to run) will be n_1. Since the EVs exchanged uncharged batteries with full ones, these batteries will be put into the charging shelf, so the number of batteries in the charging state is n_1. The third case matches with the first one while the situation in case 4 is as like as case 2. If the BSS starts with all its N batteries full, if at first Δt, n_1 vehicles arrived then for the second Δt there will be $N - n_1$ number of full batteries. After $n\Delta t$ time the number of full batteries will be $N_B - \sum n_i$. But within this interval k batteries will be fully charged thus the net number will go to $N_B - \sum n_i + k$. Meanwhile it may also be possible that the fleet in this instant (at i^{th} time unit) is so large that could not be supplemented by BSS, i.e. $\sum n_i > n^i_{BA}$. In that case the load is more than the availability, thus some vehicles need to wait for getting the batteries charged.

$$N(i) = n_i \tag{1}$$

$$N(i + T_c) = N - \sum n_i + k \tag{2}$$

the number of EV batteries waiting to be charged will be the number of vehicles arrived, i.e. $n^i_{BW} = n^i_{XA} = n_1$, similarly, the number of batteries being charged and charged finished at any i^{th} time will be $n^i{}_{BC}$ and $n_{BF}(i)$. For finding number of batteries in charging state at i^{th} time unit n^i_{BC}, two cases to be considered:

1) When the number of chargers in BSS $N_{ch} > N^i_{arrive}$ i.e. it is enough to engage the batteries arrived at i^{th} time instant, $n_{BW}(i)$ can all be charged. Thus

$$n^i_{Bc} = n^{i-1}_{BC} + n^i_{Bw} - n^i_{Bf} \tag{3}$$

2) when $N_{ch} < N^i_{arrive}$, it could not supplement batteries arrived at i^{th} time instant, the number batteries in the charging state will be the number of available chargers.

Thus

$$n^i_{BC} = N_{ch} \tag{4}$$

For this case, the batteries that are not charged at i^{th} time will be given by

$$n_{BO}(i) = n_{BW}(i) + n_{BC}(i-1) - n_{BF} - N_{ch} \tag{5}$$

If after j^{th} time unit N'_{ch} chargers are freed then number of batteries fully charged and charging will be

$$n^j_{BF} = N'_{ch} \tag{6}$$

$$n^j_{BC} = n^{j-1}_{BF} = N'_{ch} + N_{ch} \tag{7}$$

If R_t denotes the length of battery recharging cycle, then the number of time units T_c in one cycle is given by

$$T_c = \frac{R_t}{\Delta t} \tag{8}$$

Suppose at i^{th} time, a depleted battery comes then it is replaced and goes to waiting to be charged state in $(i + 1)^{th}$ time. If there are enough chargers available it will immediately be engaged and will finish up charging at $(i + 1 + N_c)^{th}$ time unit. No of EVs waiting to be charged at ith time is defined as

$$n^i{}_{BW} = n^i_{arrive} + n^{i-1}_O \tag{9}$$

But at that instant, there will be some batteries which were plugged at $(i - T_c)^{th}$ time instant, which are freed of charging and thus will add up to the number of fully charged batteries at time instant i. Thus the number of full batteries at instant i will be given as

$$n^i_{BF} = n^{i-1}_{BF} - n^{i-1}_{BW} + n^{i-T_c}_{BP} \tag{10}$$

The dynamics of EVs as well as electric batteries for the $(i+1)^{th}$ time unit can be estimated in terms of the scenario at current time unit. If $n^i_{BF} < n^i_{BW}$ then, only n^i_{BF} number of vehicles can be freed. So the number of EVs waiting for the $(i+1)^{th}$ time will be the current number of waiting vehicles plus the fleet arrived at $(i + 1)^{th}$ time unit. Meanwhile there are some batteries which have been plugged in between intervals $(i - T_c + 2)^{th}$ and i^{th} time unit, thus at $(i + 1)^{th}$ time instant they will be still in charging state and will not be finished at $(i + 1)^{th}$ time.

$$n^i_{BW} - n^i_{BF} = n^i_o$$

and

$$n^{i+1}_{BW} = n^{i+1}_{arrive} + n^i_o \tag{11}$$

$$n^{i+1}_{BC} = n_B - n^i_{BF} - \sum_{i-T_c+2}^{i} n_{BP} \tag{12}$$

Timing Model for Incoming Vehicles (EV)

The three status of the EVs will be swapped, swapping and waiting to be swapped. The EVs at any instant will be in waiting state for both the cases, when the battery is in charging and waiting to be charged phase.

$$n^i_{XW} = n^i_{BW} + n^i_{BC} \tag{13}$$

The number of vehicles in the swapped state will be

$$n^i_{XS} = n^{i-1}_{BA} + n^i_{BF} - n^i_{BA} \tag{14}$$

If there are enough of number electric vehicle batteries (EVBs) that are either fully charged or in a state of satisfying he user's demand, the vehicles that are waiting for switching to $(i+1)^{th}$ time step can be all swapped. In contrast situation, only a portion of the vehicles that are waiting for swapping in $(i+1)^{th}$ time step can be served and there will still be considerable EV population which need to be swapped in some time unit at or after $(i+2)^{th}$ time quantum. Following equations depict the distribution of EVs across various states.

$$\begin{cases} n^{i+1}_{XS} = n^{i+1}_{XW} & \text{If} \quad n^{i+1}_{XW} \le n^i_{BA} \\ n^{i+1}_{XO} = 0 \end{cases} \tag{15}$$

$$\begin{cases} n^{i+1}_{XS} = n^i_{BA} \\ n^{i+1}_{XO} = n^{i+1}_{XW} - n^i_{BA} \end{cases} \quad \text{If} \quad n^{i+1}_{XW} > n^i_{BA} \tag{16}$$

To serve the vehicle without any queuing delay, the condition $\sum n_i < n_{BA}$ should always be satisfied and in such scenario

$$S^k_{x,st} = A^{k*r}_x \tag{17}$$

In case $N_{ch} > n^i_{arrive}$ but $n_{BA} < n^i_{arrive}$, the vehicles have to wait for $T_{dm} \le T_{ch}$ depending upon what level of SOC, the users demand for the batteries to get ready. If T_{sw} is the time for swapping, total waiting time will be $T_{dm} + T_{sw}$.

$$S^k_{x,end} - S^k_{x,end} = T_{sw} \tag{18}$$

Cost Optimization Framework for Battery Swap Station (BSS)

The payoff function for the BSS is given by

$$\begin{aligned} P_{payoff} = {} & I_{revenue} + I_{old\_sale} + I_{dayahead} \\ & -(C_{penalty} + C_{cloud} + C_{\deg r} + C_{micro\_install} \\ & + C_{\inf rastructure} + C_{ch\arg ing\_\cos t}) \end{aligned} \tag{19}$$

The first term $I_{revenue}$ is revenue collected from the EV users for swapping service at stipulated battery swapping rate (BSR) per battery in USD per KWh. This is given by

$$I_{revenue} = \varepsilon.\tau.\chi.\sum_{t=1}^{T}\sum_{i=1}^{N}\delta_{i,t} \tag{20}$$

where ε is the favorable factor for promoting adoption of EVs. Smaller the ε is, more the number of people adopting EVs. τ is the conversion factor for repairing recycled batteries if needed and χ is the battery swap rate per full battery. N total number of vehicles arrived for lifetime of ten years (considered), $\delta_{i,t}$ is binary variable that denotes the swapping status of EVs and is 1 if the bus i could be serviced at time instant t. The information about state of charge (SOC) and state of health (SOH) at any instant are forecasted in real-time through cloud computing. For public electric busses with regular routes and schedules the number of batteries needed to replace could be estimated in advance. If S^{demand}_{daily} is the daily power demand (predicted with some error) from all electric busses that are dedicated to be serviced by a BSS, and $\mathbb{C}$ is the capacity of a bus (considering all the busses are identical) battery then total number of busses N need to service by BSS is given as

$$N = \sqrt{\frac{S^{demand}_{daily}}{\mathbb{C}}} \tag{21}$$

For smaller EVs with random routing behaviors the size of fleet that can arrive at the BSS in the whole day can be estimated through efficient data analytics in cloud data centers. The second term I_{old_sale} in the payoff function is the amount received after auctioning the old batteries after the passage of lifetime. $C_{penalty}$ reflects the BSS failure to satisfy the demand $D^{short}_{i,t}$ at time t. The inability is mapped to penalty at the cost of value of customer dissatisfaction *VoCD*. The *VoCD* is a dynamic parameter, depends upon the level of necessity at which the demand was created. For example the VoCD will certainly be more during peak/office hours than to some other parts of the day.

$$C_{penalty} = VoCD.\sum_{t=1}^{T}\sum_{p=1}^{P} D^{short}_{i,t} \tag{22}$$

The BSS can act completely on the behalf of aggregator and thus can participate in power trading from and into the demand market. If $I_{dayahead}$ is the profit earned from its participation in the day-ahead market then

$$I_{dayahead} = \sum\nolimits_t^T (\omega^{dayahead}_t.P^{buy}_{t,DA} - \omega'^{dayahead}_{t',DA}.P'^{sell}_{t'}) \tag{23}$$

$\omega^{dayahead}_t$ and $\omega'^{dayahead}_t$ are the rate of day ahead power (USD/KWh) in buying and selling mode respectively. It should be noted that the buying and selling cost is always unique, so as to ensure business integrity. C_{cloud} is the revenue the BSS gives to the cloud vendors for hiring its services through its information subsystem and is given through dynamic cloud pricing schemes adopted in []. $C_{\deg r}$ is the cost incurred by the BSS due to the fatigue and aging of the EV battery due to prolonged charging and discharging process.

$$C_{\deg r} = \varphi.\frac{P^{cha\arg ing}_{i,t} + P^{disch\arg ing}_{i,t}}{\sum_{p\in P}\xi_{i,p}.(V^{\max}_p)}.C^{buy}_{i,p} \tag{24}$$

$C_{micro\_install}$ is the cost suffered by the BSS owner in establishing a local micro-grid (solar panel) system. Such system will enable the BSS to perform power trading and

execute ancillary business through renewables integration. $C_{\inf rastructure}$ includes the annual cost of purchasing as well as maintaining the infrastructure equipment like battery packs, the chargers and charging racks.

$$C_{\inf rastructure} = C_{battery} + C_{ch\arg er} + C_{BSS\_station} \quad (25)$$

$$C_{battery} = N_B.\left(C_{i,p}^{buy}.\frac{\mu.(1+\mu)^{\Gamma_{i,p}}}{(1+\mu)^{\Gamma_{i,p}}-1} + \Lambda_{i,p}\right) \quad (26)$$

Where $\Lambda_{i,p} = C_{i,p}^{buy}.(1+\beta)$ (annual maintenance cost of battery)

$$C_{ch\arg er} = N_{ch}.\left(C_{ch}^{buy}.\frac{\mu.(1+\mu)^{\Gamma_{ch}}}{(1+\mu)^{\Gamma_{ch}}-1} + \Lambda_{ch}\right) \quad (27)$$

where the annual maintenance cost of charger is given as $\Lambda_{ch} = C_{ch}^{buy}.(1+\beta')$ and μ is the loss conversion rate (LCR) of investment.

Similarly, $C_{BSS\_station}$ is the investments and operating cost of other fundamental infrastructure elements like swapping shelves, charging robots, distribution transformers, etc.

$$C_{BSS\_station} = C_{BSS\_invest} + C_{BSS\_oper} \quad (28)$$

$$C_{BSS\_invest} = (N_{shelve}.C_{shelve}^{buy} + N_{robot}.C_{robot}^{buy} + C_{d\_trans}^{buy}).$$

$$\left(\frac{\mu.(1+\mu)^{\Gamma}}{(1+\mu)^{\Gamma}-1}\right) \quad (29)$$

$$(1+v) + \gamma.T_{loss} \quad (30)$$

Above all, the BSS sinks power from the smart grid system and use it to charge the batteries. Thus the net cost is given by

$$\begin{aligned} C_{ch\arg ing\_\cos t} &= C_{grid} - I_{micro\_power} \\ &= \psi.P_t^{\sin k} - \psi' P_t^{microgrid} \end{aligned} \quad (31)$$

The second term is subtracted as an aid from the auxiliary and demand side business. For a time segment Δt, when a battery is plugged into the main source, there is some inherent charge loss due to power conditioning mechanisms; this again had to be paid by BSS.

$$P_t^{\sin k} = P_t^{ch\arg ing} + P_t^{loss} \quad (32)$$

$$P_t^{ch\arg ing} = \sum_{j=1}^{N}\sum_{k=1}^{N_{ch}} \sigma^t{}_{j,k}.(SOC_{i,p}^{\max} - SOC^t{}_{i,p}).\frac{\Omega_{k,p}^t}{\eta}.\Delta t) \quad (33)$$

$P_t^{microgrid}$ is power obtained from the locally installed micro-grid. The BSS sells this power at the rate ψ', so the income from renewable sources I_{micro_power} is given by

$$I_{micro\_power} = \psi' P_t^{microgrid} = \alpha.N' \quad (34)$$

Where N' is the number of EVBs charged by demand side services at swapping rate α.

$$P_t^{loss} = \gamma.\sum_{k=1}^{N_{ch}} \Omega_{k,p}^t.\sigma^y{}_k.\Delta t \quad (35)$$

From Eqs. 34 and 35

$$\begin{aligned} C_{ch\arg ing\_\cos t} = \psi.\Bigg\{ &\left(\sum_{j=1}^{N}\sum_{k=1}^{N_{ch}} \sigma^t{}_{j,k}.(SOC_{i,p}^{\max} - SOC^t{}_{i,e}).\frac{\Omega_{k,p}^t}{\eta}.\Delta t\right) \\ &+ \left(\gamma.\sum_{k=1}^{N_{ch}} \Omega_{k,e}^t.\sigma_k^t.\Delta t\right)\Bigg\} - \psi' P_t^{microgrid} \end{aligned} \quad (36)$$

Subject to Constraints

$$\begin{aligned} SOC_{i,p}^t = &\left(SOC_{i,p}^{t-1} + \rho_{i,t}^{ch\arg}.\zeta^{ch\arg} - \frac{\rho_{i,t}^{dch\arg}}{\zeta^{dch\arg}}.(O_{i,t})\right) \\ &.(1-\delta_{i,t}) + SOC_{i,p}^{start}.\delta_{i,t} \end{aligned} \quad (37)$$

If the battery is ready for swap, it is replaced and so the SOC is not updated, rather is changed by the state of charge of a new coming battery. ($.\zeta^{ch\arg}$ - battery charging efficiency)

$$SOC_{i,p}^{t,low} = \mathbb{C}_{i,p}^t - SOC_{i,p}^{t-1}.\xi_{i,p} \quad (38)$$

represents the shortage of charge for vehicle I of group p at instant t, where $\mathbb{C}_{i,p}^t$ is the level of SOC claimed by the customer, the total population of EV arrived as predicted from cloud at BSS in the whole day is given by

$$N_v = \sum_{i=1}^{N} \xi_{i,p}.\delta_{i,p} + D_{i,t}^{short} \quad (39)$$

The first term gives the number of vehicles successfully serviced while the latter gives the number of vehicles that the BSS failed to satisfy, which is reflected as penalty in the payoff function. When the BSS participates in the day-ahead (DA) market, it purchases energy from the wholesale market in low tariff time and sells when the demand is high at higher tariff making a profitable trade. However some proportion of DA energy is also used to charge the EV batteries, given by

$$I_{excess} = P_{t,DA}^{buy} - P_{t',DA}^{sell} = \sum_{i=1}^{N_{DA}} \rho_{i,t}^{ch\arg ing} - \rho_{i,t}^{disch\arg ing} \quad (40)$$

Since the BSS is coupled to the distributed transformer, the charging power of each EV battery is restricted by the transformer capacity.

$$\mathrm{T}_c.\pi \geq N_{ch}.\rho^{\max}{}_{ch} \quad (41)$$

The number of battery packs at any instant is bounded by the size of BSS.

$$0 < N_B \leq N_{B.\max} \tag{42}$$

The number of chargers at any instant is kept less than the number of battery packs to ensure that no charger remains idle.

$$0 < N_{ch} \leq N_{B,t} \tag{43}$$

The availability of a BSS (Φ) is parameterized in terms of the ratio of the time the EVs not get delayed to the total time duration in which the length of queue in the BSS was not less than one. It gives the degree with which the BSS can meet the requirements of swapping the EVs. The BSS is efficiently programmed to assure that Φ in a day is always greater than a desired minimum.

$$\Phi_{\min} \leq \Phi_d \tag{44}$$

Since the overall objective is to design an architecture that ensures the profitability of using EVs over the ICE vehicles. The running cost of an EV through battery swapping technique should be significantly less than that of a traditional vehicle running through fossil fuels. i.e.

$$\varepsilon.\tau.\chi.\Upsilon_{daily} \leq C^{ICE}_{vehicle} \tag{45}$$

Υ_{daily} is the number of times an EV battery is exchanged in a day. (can this be used for estimating the number of vehicles running in the road at any instant). If T_{trip} is the time for one trip, D_{interval} (min), the number of vehicles running on at any instant is given by $N^t_{b,route} = \frac{T_{trip}}{D_{\text{interval}}}$ (this again has to be bounded due to traffic rules, maintain the load on the roads).

The charging and discharging power of each battery cannot exceed the theoretical limit.

$$0 \leq \rho^{ch\arg ing}_{i,t} \leq (1-\delta_{i,t}).\rho_{i,p}{}^{\max} \tag{46}$$

$$0 \leq \rho^{dch\arg}_{i,t} \leq (1-\delta_{i,t}).\rho_{i,p}{}^{\max} \tag{47}$$

The state of charge in a battery is always kept above a minimum level to ensure the driver is relieved of EVRA.

$$\mathbb{C}^{\min}{}_{i,p}.\xi_{i,p} \leq SOC^t_{i,p} \leq \mathbb{C}^{\max}{}_{i,p}.\xi_{i,p} \tag{48}$$

Assuming all the batteries functioning ideally, there is no leakage of charge (discharging) occurs during plugged time. Where $\partial_{i,t}$ is an auxiliary variable for battery i at time t denoting the occurrence of charging or discharging event. Thus if

$$\rho^{ch\arg ing}_{i,t} \leq \rho_{i,p}{}^{\max}.\partial_{i,t} \tag{49}$$

Then

$$\rho^{dch\arg}_{i,t} \leq \rho_{i,p}{}^{\max}.(1-\partial_{i,t}) \tag{50}$$

For profiting in the day-ahead business, the energy drained at low peak time in day-ahead market is traded only when the demand peak is sharp and high. It make no sense in just buying the energy and selling at the same rate and same time. Thus, if

$$P^{buy}_{t,DA} \leq \rho_{i,p}{}^{\max}.\partial'_t \tag{51}$$

Then

$$P^{sell}_{t',DA} \leq \rho_{i,p}{}^{\max}.(1-\partial'_t) \tag{52}$$

In the case where the EVB is only owned by the BSS, the EV user doesn't buy any battery while buying the vehicle. For such configuration the total number of batteries in the BSS universe is constant, the sum of number of batteries in each of four states (full, charging, waiting, running) is constant. Ideally, for BSS deployed at the public bus depot as in our case, the number of fully charged batteries at the beginning of the day should be same as at the end of the day, to efficiently execute the swapping services in next day. For obtaining ideal output from the BSS configuration, there should be no vehicle in the waiting state and this could be achieved only when the station is always have ample amount of fully charged batteries such that the vehicle is released swiftly.

$$N^{i,t}_{BC} + N^{i,t}_{BW} + N^{i,t}_{BF} = \mathrm{N}_{bus} \tag{53}$$

$$N^{i,1}_{BF} = N^{i,T}_{BF} \tag{54}$$

$$N^{i,t}_{BW} \geq 0 \tag{55}$$

$$N^{i,t}_{BF} \geq \ell.N^{i,t}_{demand} \tag{56}$$

ℓ is the adequacy factor that reveals the nature of fluctuating swapping demand. To maintain the ethics and legal administration each consumer is served in first in first serve (FIFS) manner.

$$\begin{cases} i < j \\ t_j < t_j \end{cases} \text{for } i, j \in \mathrm{N}, t \in T \tag{57}$$

The charging time is directly proportional to the depth of discharge and inversely to the charging strength of each charger of specific group.

$$T_{ch} = DOD/\Omega^t_{k,e} \tag{58}$$

In terms of the of the EV battery, the time taken to get fully charged from the initial state of charge SOC_o to peak capacity $\mathbb{C}_{i,p}$ is given by

$$T_{ch} = (1-SOC_o).\mathbb{C}_{i,p}/\rho^{ch\arg ing}_{i,t} \tag{59}$$

The cloud application at each end of the EV users will track the traveled distance, starting from the last swapping, to estimate the stochastic energy demand at every instant.

$$E_t = \sum\nolimits_{i=1}^{N} e^i_d = \sum\nolimits_{i=1}^{N} s^i_d.E^i_{km} \tag{60}$$

Probable demand from fleet $= E_t$, $e_d^i =$ demand of each vehicle

$$N_{extra} = N_{battery} - N_{bus} \tag{61}$$

In case of public bus transport where the batteries are only owned by BSS, the BSS should be leveraged with some excess of batteries in order to ensure hassle free operation of the infrastructure.

$$N_{extra} = N_{battery} - N_{bus} \tag{62}$$

$$N_{extra} > 0$$

The capacity of the battery $\mathbb{C}_{i,p}$ and charging mode decides the amount of current to be drawn from the supply.

$$\mathrm{I} = \mathbb{C}_{i,p}.\Omega_{k,e}^t \tag{63}$$

The BSS provides varying modes of charging (fast, economic and slow) under different circumstances, which defines rate at which to draw the power. These modes are supported by adapters of multiple classes, class 1 chargers are the fastest having maximum charging power, are used to serve the executive and emergency vehicles where cost doesn't matter. Similarly class 2 and class 3 adapters are designed to support economic and slow modes of charging respectively. The adapters are plugged to the charging unit which drain power from the transformer, the strength of adapters of each class is bounded by the energy draining capability of the charging unit. If V is the output voltage of the transformer, the charging rate of adapters is given by

$$\lambda = \eta'.z \tag{64}$$

Where λ defines the type of charger, defines the η' and z is the impedance loss. If there are y_1 chargers of class 1, y_2 of class 2 and y_3 of class 3, the servicing capability of the whole BSS subsystem is given as

$$\mathrm{P}_{BSS} = \frac{(y_1 + y_2 + y_3).\rho_{cu}}{(1 + d_m)} \tag{64}$$

From Eqs. 28 and 29

$$\mathrm{P}_{BSS} = \frac{(y_1 + y_2 + y_3).\Omega_{k,e}^t.V.\mathbb{C}_{i,p}}{(1 + d_m).\lambda} \tag{66}$$

In the proposed model, EV swapping infrastructure, market price uncertainty is modeled using the scenario generation approach. Doing so enables the optimization model to account for profit-payoff and risk optimization simultaneously. The BSS will act on behalf of the aggregators and participate in bidding, cloud-fog monitoring, demand response (DR), as well as dynamic energy management (DEM) and other ancillary services. Often BSS modify their hourly charging schedule toward formulating bidding strategies. Monte Carlo (MC) method can be employed in the proposed scheme to model the uncertainties in the EVs fleet characteristics and power market. In order to handle the uncertainties, conditional value at risk (CVaR) can be used to manage the BSS financial risk that may arise in fluctuating market environments. When the probability distribution functions (PDF) of random parameters are included, MC is employed to calculate the CVaR. There may be deterministic target profiles for EV drivers where they declare a target level of SoC. In case of random EVs penetration, the requirements are managed through stochastic programming formulation. The uncertainties like forecast errors of EV's hourly electricity consumptions, arrival and departure schedules and the size of EVs fleet can be depicted by truncated normal distribution functions (NDF) where the aggregate values are the forecasts and percentages of these aggregate values give standard deviations.

Stochastic mixed integer linear programming can be used to formulate the proposed model and will be solved by commercial mixed integer programming (MIP) solver. The tradeoff between maximizing expected payoff and minimizing risk due to the physical and commercial uncertainties is modeled by considering the expected downside risk as a constraint. For forecasting the hourly reserve probabilities of smart grid (SG), artificial neural network (ANN) will be applied. The installation of the proposed architecture also introduces unique economic and environmental opportunities in electricity business market. The smart BSS acts as an entity that has a function similar to that of a distribution system operator and will participate in the bulk energy market operation by submitting its bidding strategies.

Conclusion

In this work, we present a battery swapping (BSS) infrastructure for smart and efficient charging management of EVs. In order to ensure duplex exchange and trade of energy between entities, we incorporate the concept of Internet of Things (IoT) into BSS and propose Cloud-Fog architecture BSS control. We also present a timing and sequence model for defining the movement of EVs across the BSS network. Finally a cost optimization framework is given, for infrastructure planning of IoT aided BSS. The potential solution approaches for the given optimization formulation are also highlighted.

References

1. Yu Z, Zhao Yang D, Yan X, Ke M, Jun Hua Z, Jing Q (2014) Electric vehicle battery charging/swap stations in distribution systems: comparison study and optimal planning. Power Syst IEEE Trans 29(1):221–229

2. Chen YW, Chang JM (2015) EMAas: cloud-based energy management service for distributed renewable energy integration. IEEE Trans Smart Grid 6(6):2816–2824
3. Hussain MM, Alam MS, Beg MMS (2017) Plug-in electric vehicle to cloud data analytics for charging management. IJET 9(3):361–370
4. Hussain MM, Alam MS, Beg MMS (2018) A risk averse business model for smart charging of electric vehicles. In: Lecture Notes, Smart Innovation, Systems and Technologies (SIST) series, vol 79. Springer, pp 749–759
5. Zheng Y, Member S, Dong ZY, Member S, Xu Y (2014) Electric vehicle battery charging / swap stations in distribution systems: comparison study and optimal planning. IEEE Trans. Power Systems 29(1):221–229
6. Bayram IS, Michailidis G, Papapanagiotou I, Devetsikiotis M (2013) Decentralized control of electric vehicles in a network of fast charging stations. In: Globecom 2013-Symposium Sel Areas Commun (GC13 SAC), pp 2785–2790
7. Borup M (2014) Electric mobility case study for Denmark; Case study: Better place – an effort of creating new actor roles and infrastructure for electric car mobility. In: Top-NEST Proj. Number RD 2011-42, no, April, pp 1–34
8. Chafkin M (2014) A broken place: the spectacular failure of the startup that was going to change the world. Fast Company. Accessed on 21st March, 2016
9. Five lessons from better place's collapse - Forbes
10. Earley R, Green-Weiskel L, Kang L, An F (2011) Electric Vehicles in the Context of Sustainable Development in China. Background Paper No.9, CSD19/2011/BP9, The Innovation Center for Energy and Transportation (iCET), Department of Economic and Social Affairs, United Nations
11. Li W (2015) Design and Simulation of a Battery Swap Station for Electric Battery Buses. Fifth International Conference on Transportation Engineering, Dalian, China, September 26-27, pp. 3124–3130
12. Better place battery swapping tech to live on in Chinese buses - Israel News - Jerusalem Post
13. Lunden I, Lunden I (2013) A new place for better place, as bankrupt $800m+ backed electric car startup sold for $12m. TechCrunch. Accessed on 04th January 2017
14. Sorokanich B (2015) Musk: Tesla 'unlikely' to pursue battery swapping stations
15. Zou F, Liu N, Lu X (2014) Optimal configuration for battery switch stations of electric buses. In: IEEE Transp. Electrif. Conf. Expo, ITEC Asia-Pacific 2014 - conference proceedings, pp 1–5
16. Mak H, Shen ZM (2013) Infrastructure planning for electric vehicles with battery swapping. Management Science 59(7):1557–1575
17. Saqib M, Hussain MM, Alam MS, Sufyan Beg MM, Sawant A (2018) Public opinion on viability of XEVs in India. Compendium of technical papers, Lecture notes in electrical engineering, vol 487, pp 139–150
18. Worley O, Klabjan D (2011) Optimization of battery charging and purchasing at electric vehicle battery swap stations. In: 2011 IEEE Veh. Power Propuls. Conf. VPPC 2011, pp 1–45
19. Bayram IS, Michailidis G, Devetsikiotis M Unsplittable load balancing in a network of charging stations under QoS guarantees, pp 1–10
20. Sun B, Tan X, Tsang DHK (2015) Optimal charging operation of battery swapping stations with QoS guarantee. In: 2014 IEEE Int. Conf. Smart Grid Commun. SmartGridComm 2014, no 619312, pp 13–18
21. Sarker R, Member S, Pandži H, Ortega-vazquez MA (2014) Optimal operation and services scheduling for an electric vehicle battery swapping station. IEEE Trans. Power System 30(2):1–10
22. Xie P, Li Y, Zhu L, Shi D, Duan X (2016) Supplementary automatic generation control using controllable energy storage in electric vehicle battery swapping stations. Transm Distrib IET Gener 10(4):1107–1116
23. Dai Q, Member S, Cai T, Duan S, Zhang W, Zhao J (2014) A smart energy management system for electric city bus battery swap station
24. Diamantoulakis PD, Kapinas VM, Karagiannidis GK (2015) Big data analytics for dynamic energy management in smart grids. Big Data Res 2(3):94–101
25. Mcpherson C, Richardson J, Mclennan O, Zippel G (2012) Planning an electric vehicle battery-switch network for australia, no. September 2011, pp 1–15
26. Yang J, Sun H (2015) Battery swap station location-routing problem with capacitated electric vehicles. Comput Oper Res 55:217–232
27. Xinyi L, Nian L, Yangqi H, Jianhua Z, Nan Z Station considering service availability
28. You P, Yang Z, Zhang Y (2015) Efficient battery charging schedule of battery-swapping station for electric buses
29. Hua J (2016) Progress in battery swapping technology and demonstration in China. Tsinghua Univ.
30. Hussain MM, Alam MS, Beg MMS Federated cloud analytics frameworks in next generation transport oriented smart cities (TOSCs) - applications, challenges and future directions. EAI Endorsed Trans. Smart Cities, vol 2018
31. Hussain MM, Alam MS, Beg MMS, Asaad M Viability of Fog Methodologies in IoT aware Smart Grid Architectures Viability of Fog Methodologies in IoT aware Smart, SGIot-2017, July 2017, Canada