Journal of Urban Health: Bulletin of the New York Academy of Medicine, Vol. 87, No. 1
doi:10.1007/s11524-009-9411-2
© 2009 The New York Academy of Medicine

Mixing Urban Health Research Methods for Best Fit

Evelyne de Leeuw

One of the great attractions of city life is its diversity. There have been numerous attempts to categorize and evaluate "push" and "pull" factors for urbanization. Push factors (pushing individuals, families, and communities out of rural and regional centers) would be, for instance, lack of employment, poor social, educational, health, and cultural facilities, and diminished opportunities to find life partners, whereas urban pull factors include job opportunities, (religious) freedom, and new chances for community development and courtship.

Most of the outside factors in the natural environment (such as desertification and natural disasters) can be conceptualized as diversity issues. Urban diversity takes many forms, and city governance structures tend to follow suit.

In many domains, diversity is attractive; whether we look at urban planning and aesthetics, political or culinary smorgasbords, access to health service and entertainment facilities, or opportunities for connectedness, a greater variety tends to relate to more choice for well-being and fulfillment. A landmark study that eventually led to the emerging discipline of social neuroscience found a dose–response relationship between the diversity of social ties people engage in and their susceptibility to infectious disease.[1] Similarly, it is postulated that such a relationship might exist between urban aesthetics, physical activity, and health.[2] Clearly, the diversity of city life is an important determinant of health—if city dwellers choose to embrace that diversity.

From its inception, the World Health Organization Healthy Cities program has espoused this diversity. In the 11 qualities a Healthy City should strive to attain,[3] there are few pronouncements that could be seen as simple, homogeneous, or lacking an appreciation of diversity:

1. A clean, safe, high-quality physical environment (including housing quality)
2. An ecosystem which is stable now and sustainable in the long term
3. A strong, mutually supportive, and non-exploitive community
4. A high degree of public participation in and control over the decisions affecting one's life, health, and well-being
5. The meeting of basic needs (food, water, shelter, income, safety, and work) for all the city's people
6. Access to a wide variety of experiences and resources with the possibility of multiple contacts, interaction, and communication
7. A diverse, vital, and innovative city economy
8. Encouragement of connectedness with the past, with the cultural and biological heritage, and with other groups and individuals

Evelyne de Leeuw is with the Community Health Systems & Policy, Faculty of Health, Medicine, Nursing and Behavioural Sciences, Deakin University, Geelong, Australia.

Correspondence: Evelyne de Leeuw, MSc, MPH, PhD, Community Health Systems & Policy, Faculty of Health, Medicine, Nursing and Behavioural Sciences, Deakin University, Geelong Waterfront Campus, Geelong, Australia. (E-mail: evelyne.deleeuw@deakin.edu.au)

9. A city form that is compatible with and enhances the above parameters and behaviors
10. An optimum level of appropriate public health and sick care services accessible to all
11. High health status (both high positive health status and low disease status)

Even if any of these 11 parameters may be easy to develop or assess on its own, their interaction in a general Healthy City program logic model (or theory) is daunting, to say the least. There have been very few attempts to assess the comprehensive effectiveness of a combination of all these elements. The closest of such efforts has been made by Takano and colleagues[4] (Figure 1), but interestingly, they have failed to include the "determinants of the determinants,"[5] that is, connectedness with the past (8), urban form (9), variety of interaction (6), public participation (4), and community life (3).

The Healthy City program logic does not only reflect the fact that diversity is an integral part of health and urban life but also demonstrates that investigating multilevel city health matters is a hugely complex affair. In acknowledging this

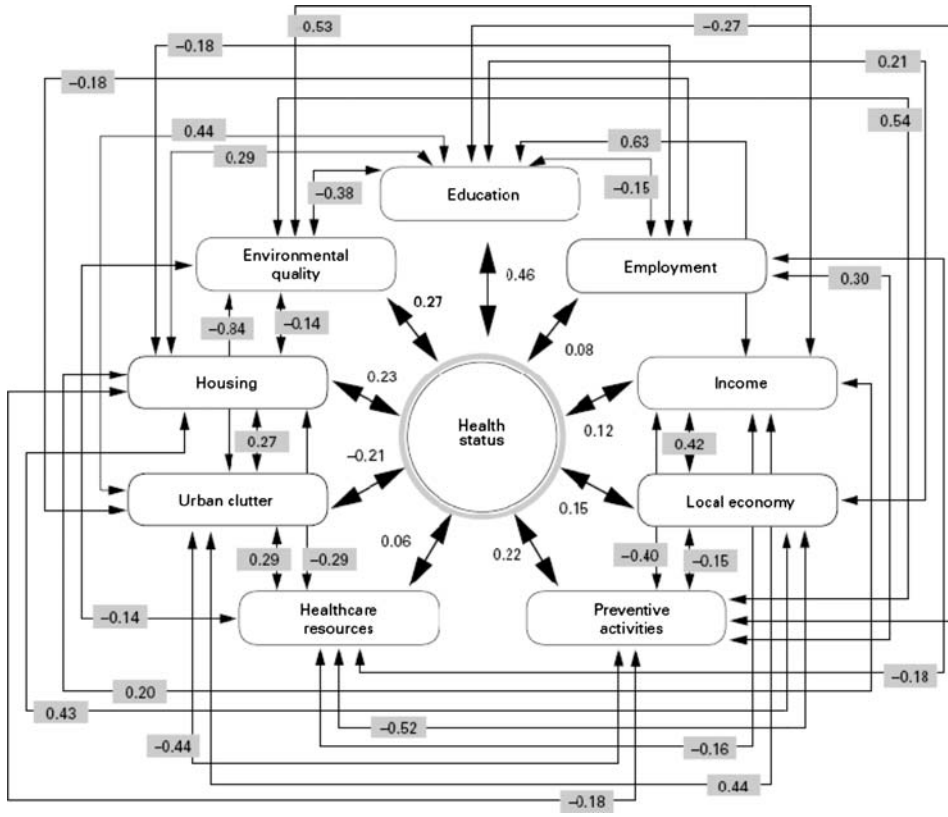

FIGURE 1. Interrelation between the health determinants and the health status, *Health Status* is represented by the health index. *Healthcare resources*, *Preventive activities*, *Environmental quality*, *Housing*, *Urban clutter*, *Education*, *Employment*, *Income*, and *Local economy* individually represent health-determinant factors. *Fine thread arrows* indicate pairs of health-determinant indices with statistically significant correlation with Pearson correlation coefficients. *Thick thread arrows* show relation between health-determinant indices and the index of health with Pearson correlation coefficients.

complexity, Ompad et al.[6] suggest a methodology comprising case studies, ecological analysis, and multilevel methods. What is interesting is that theirs is a proposition grounded in epidemiological thought and seems a gross oversimplification of the methodological toolbox required for the study of complex sociopolitical (urban) health environments. The challenge, though, would be the connection and validation of the enormous range of methods that can be applied to these issues. Over and above this, the connection between urban health research and socioeconomic and political realities of urban governance still seems critical.[7,8]

How would the success of complex urban health programs such as "Healthy Cities" then be established?

In answering this question, there are two issues that need to be considered.

The WHO Healthy Cities program is the first child of the 1986 Ottawa Charter for Health Promotion. Perhaps the most critical tenet of the charter (which continues to enjoy wide support as a gospel of health development) is that people should be at the center of activities, programs, and policies for health: "Health promotion is the process through which individuals, groups, and communities increase control over the determinants of health, and thereby improve their health."[9] Principles from community development and empowerment studies have successfully been applied to the development and evaluation of a wide range of health promotion programs, including setting-based ones such as health-promoting schools, healthy islands, healthy marketplaces, etc.[10] Individuals and communities, therefore, need to be engaged in the development, implementation, and reporting of health promotion evaluation. This would make these evaluations more relevant, acute, and responsive to real need.

It may be suggested, of course, that such a (normative) position would easily lead professional researchers into what we could call the "qualitative research fallacy." Both academic researchers and community leaders may believe that qualitative research (be it focus groups, phenomenological interpretation, participant observation, action research, etc.) would connect better to and be more easily digested by community realities. This is of course not the case. Epidemiology and statistics can tell better stories than badly told qualitative narratives.[11] It would only be the incompetent presentation skills of badly trained epidemiologists that would exclude hard quantitative analysis from being driven and appreciated by "lay" people.[12]

Secondly, there are validated approaches to determining the best methodological mix. Critically, evaluators engage with stakeholders in the phenomena under assessment to establish that mix. This would specify best "fit" between expert positions on evaluation and assessment and those that are either investigated or will need to apply the findings of research. These approaches reduce the effort that some have to put into knowledge "translation."[8] The first of these approaches is "realist evaluation," a perspective at the interface between policy development, politics, and academic inquiry.[13] The second is "fourth-generation evaluation," a perspective that engages with communities in a process of iterative consultation.[14] Often, academics from the health and life sciences fields that are tangentially familiar with these approaches dismiss them as only leading to "soft evidence." This is not necessarily the case: in many situations, policy makers and communities recognize that they require "hard" and unequivocal science to inform their actions. Recently, Corburn has applied such perspectives with great success.[15,16]

The publication, in this issue of the *Journal of Urban Health*, of an assessment of the Brighton and Howe Healthy City program is a landmark. It demonstrates that

insightful and conscientious evaluations can yield important findings with a qualitative mix of methods. Hall, Davies, and Sherriff should be congratulated with their important contribution to this field. For the further development of policies at the global level (that is, both at the local council as well as WHO levels), their findings may contribute to better urban governance and, therefore, better urban health.

REFERENCES

1. Cohen S, Doyle WJ, Skoner DP, Rabin BS, Gwaltney JM. Social ties and susceptibility to the common cold. *JAMA*. 2007; 277: 1940–1944.
2. Saelens BE, Sallis JF, Frank LD. Environmental correlates of walking and cycling: findings from the transportation, urban design, and planning literatures. *Ann Behav Med*. 2003; 25(2): 80–91.
3. Hancock T, Duhl L. *Promoting Health in the Urban Context. WHO Healthy Cities Papers No. 1*. Copenhagen: FADL; 1988.
4. Takano T, Nakamura K. An analysis of health levels and various indicators of urban environments for Healthy Cities projects. *J Epidemiol Community Health*. 2001; 55: 263–270.
5. Marmot M, Friel S, Bell R, Houweling T, Taylor S. Closing the gap in a generation: health equity through action on the social determinants of health. *Lancet*. 2008; 372(9650): 1661–1669.
6. Ompad DC, Galea S, Caiaffa W, Vlahov D. Social determinants of the health of urban populations: methodologic considerations. *J Urban Health*. 2007; 84(1): i42–i53. doi:10.1007/s11524-007-9168-4.
7. Burris S, Hancock T, Lin V, Herzog A. Emerging strategies for healthy urban governance. *J Urban Health*. 2007; 84(1): 154–163.
8. de Leeuw E, McNess A, Crisp B, Stagnitti K. Theoretical reflections on the nexus between research, policy and practice. *Crit Public Health*. 2008; 18(1): 5–20.
9. World Health Organization, Health & Welfare Canada, Canadian Public Health Association. Ottawa Charter for Health Promotion. An International Conference on Health Promotion—The Move Towards a New Public Health. Nov 17–21, Ottawa, Canada; 1986.
10. Dooris M, Poland B, Kolbe L, et al. Healthy Settings: Building evidence for the effectiveness of whole system health promotion - challenges and future directions. In: McQueen D, Jones CM, eds. *Global Perspectives on Health Promotion Effectiveness*. New York: Springer; 2007: 327–352.
11. Tufte ER. *The Visual Display of Quantitative Information*. 2nd ed. Cambridge: Graphical; 2008.
12. de Leeuw, E. Health policy, epidemiology and power: the interest web. *Health Promot Int*. 1993; 8(1): 49–52.
13. Pawson R. *Evidence-based policy. A realist perspective*. Thousand Oaks: Sage; 2006.
14. Guba EG, Lincoln YS. *Fourth Generation Evaluation*. Newbury Park: Sage; 1989.
15. Corburn J. *Street Science. Community Knowledge and Environmental Health Justice*. Cambridge: MIT; 2005.
16. Corburn J. Reconnecting with Our Roots. American Urban Planning and Public Health in the Twenty-first Century. *Urban Affairs Rev*. 2007; 42(5): 688–713.