Understanding IoT Through the Human Activity: Analogical Interpretation of IoT by Activity Theory

Narae Kim, Sangwon Lee(✉), and Taehyun Ha

Department of Interaction Science, Sungkyunkwan University, Jongno, Seoul, Korea
naraeOll3@naver.com, upcircle@skku.edu, ontophilla@gmail.com

Abstract. Currently Internet of Things (IoT) is one of the major issues in academia and industry. However, studies so far have tended to focus on technical aspects. The future technologies need to be developed in user perspectives because users center in connected situations based on IoT. As a part of addressing this issue, the present study proposes a conceptual model for the IoT process, which can be likened to a human activity process based on 'Activity Theory (AT)'. Focusing on how people actually work in IoT situations, we attempt to draw an analogy between IoT and AT in terms of three interaction types among input device, sensor/network, task of IoT device, standard/protocol, and output device. The proposed model provides new viewpoint and direction for future research in IoT domains.

Keywords: Internet of Things (IoT) · Activity theory (AT) · User-centric · Analogy analysis

1 Introduction

In the Internet of Things (IoT) paradigm, many of the objects that surround us will be on the network in one form or another and someday it will evolve into connecting everyday existing objects [5]. Some of the major IoT application areas such as health care and transportation already drew attention and successfully adapted them. In the future IoT era, operators will try many new initiatives and then will be focused on providing valuable services.

In academia, other researchers have been studied technical points of IoT particular in the area of technical structure and basic concept for more than a decade. IoT technologies continue to be an active area of research. Because of this aspect of IoT technologies has been studied considerably, the present study addresses the conceptual model of IoT by using the human activity but rather not to emphasize technical ways of IoT.

There are two reasons why this study utilizes Activity Theory (AT). First, for such a theory to be used to understand human work and learning, it must have a clearly worked out analysis of behavior that can support both experimental and analytical

C. Stephanidis (Ed.): HCII 2015 Posters, Part I, CCIS 528, pp. 38–42, 2015.
DOI: 10.1007/978-3-319-21380-4_7

methods of study. The need for this dual approach becomes apparent when we consider the problems of design in human performance, man–machine systems, human–computer interaction, and computer-based learning [3]. Second, AT has a simple but powerful hierarchy for describing activity that could be common coin for all HCI researchers [7]. For this reason, AT is used to portray the new IoT model in this paper.

The main purpose of analogy is to suggest the new way to view and characterize IoT through the human activity. The paper is organized as follows. Section 2 describes IoT. Section 3 presents example of the correspondence between AT and IoT. Section 4 suggests future research and applications.

2 The New Perspective of IoT

The core concept of IoT is that everyday objects can be equipped with identifying, sensing, networking and processing capabilities that will allow them to communicate with one another and with other devices and services over the Internet to achieve some useful objective [8]. In future, there will be intelligent applications for smarter homes and offices, smarter transportation systems, smarter hospitals, smarter enterprises and factories [2]. IoT holds the promise of improving people's lives through both automation and augmentation. The capabilities offered by the IoT can save people and organizations time and money as well as help improve decision making and outcomes in a wide range of application areas [8]. However, more researches need to be focused on an integration of human and IoT and how IoT services impact on users.

In this study, AT is used to generate the new IoT model which has the process and the outcome. In addition, many interconnected networks in IoT and AT are used to draw the new viewpoint.

To offer a better idea of how the new IoT process model can be operationalized, this study utilizes three types of interaction which use the tool during the interaction like Fig. 1. Figure 1 is the first generation of AT and it created the idea of the tool in the activity system. Three types of interaction all have IoT input and output devices as key components because IoT input and output devices are the axis of service execution in the IoT progress. Therefore, the present study demonstrates three types of interaction which have cause-and-effect relationships between IoT input and output devices.

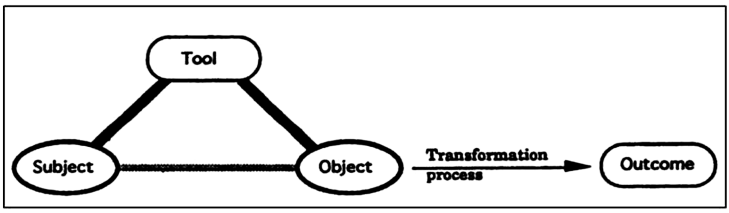

Fig. 1. Mediated relationship at the individual level in AT [6]

3 Modeling IoT with AT

Three types of interactions are the following:

(1) IoT input device ↔ Sensor/network ↔ IoT output device
(2) IoT input device ↔ Task of IoT device ↔ IoT output device
(3) IoT input device ↔ Standard/protocol ↔ IoT output device

Figure 2 is the diagram for IoT service known as Nest. This study will explain based on Fig. 2 because this is one of the processes which need tools when it interacts with others as Fig. 1. This also represents social and collective components as AT. Furthermore, it is more realistic and could be readily comprehensible. Therefore we utilize this diagram by the example of IoT progress. In Fig. 2, the IoT input device is the thermostat, sensor is the heat link, and the IoT output device would be the boiler.

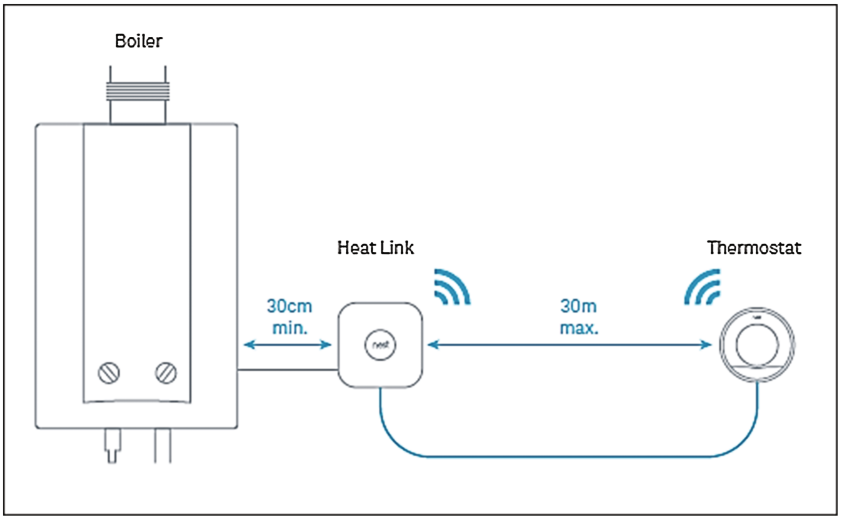

Fig. 2. The nest thermostat system

3.1 IoT Input Device ↔ Sensor/Network ↔ IoT Output Device

In AT, a subject is a person or group engaged in an activity [1] and it is an actor of AT. The tools (mediation) can occur through the use of many different types of tools, material tools as well as mental tools, including culture, ways of thinking and languages [6]. Tool stands for several forms such as symbol or sign. An object is held by a subject and motivates the activity, giving it a specific direction [1]. Activity is directed to satisfy a need through a material or ideal object [4]. In addition, it is possible that the object and motive themselves will undergo changes during the process of an activity; the object and motive will reveal themselves only in the process of doing [6]. An Outcome is a long-terms result of activity. Transforming the object into an outcome motivates the existence of the activity [6].

In IoT, the IoT input device is an agent which performs in accordance with goals and tasks. Another important elements of IoT are network and sensor as the tool in AT. Sensor and network are composed of lots of layers and those layers do many kinds of different jobs. The IoT output device refers to an object that has been modified by the subject according to required goal of activity. Execution is a result of the activity.

The IoT input device chooses the type of sensor or network depending on its cumulative experience or environment. The IoT input device also accomplishes duty by using sensor and network which make the IoT input device enable to connect other things or services. For instance, in Fig. 2, the thermostat chooses the hot link as sensor because it needs to control the boiler to keep the average room temperature also the hot link make the thermostat can connect with the boiler. To purpose of use sensor and network are to work toward a goal activity and to take a direction of activity. Finally, all the above IoT connection has some result and it is called execution. Transforming the duty into an execution motivates the existence of the doing process of IoT because IoT runs the process to achieve duty and successfully accomplished duty can appear as an execution.

3.2 IoT Input Device ↔ Task of IoT Device ↔ IoT Output Device

The division of labor informs how tasks are divided horizontally between community members as well as referring to any vertical division of power and status [1]. The division of labor refers to the explicit and implicit organization of a community as related to the transforming process of the object into the outcome [6].

The task of IoT device can be defined as a logically organized system of process to achieve the duty. The task of IoT device is conceptualized to solve tasks or problems. The task of IoT device depends on IoT input and output devices. In addition, the task of IoT device leads to the result that the IoT device can accomplish its duty and execute the service. For example, the IoT input device has to drop the temperature in Fig. 2 then 'drop the temperature' is the task of IoT device and the IoT input device runs by its own process to achieve it.

3.3 IoT Input Device ↔ Standard/Protocol ↔ IoT Output Device

Rules are guidelines and rules control activities in activity system. Rules regulate actions and interact within an activity [1]. Rules cover both explicit and implicit norms, conventions, and social relations within a community [6].

Standard and protocol in process are rules in IoT and these give guidelines how to process in IoT system. Standard and protocol also have influence on the IoT device because these rules regulate what the IoT device can and can't do. In Fig. 2, the invisible standard/protocol always controls the thermostat, the heat link and the boiler. Therefore, IoT device, sensor and network can operate properly. If there are no rules then an error could occur.

4 Discussion and Conclusion

The present paper gets the significant indication that how the IoT can be explained through the human activity. Future research needs to develop the new IoT model for the integration of human and IoT domain and the creation of new IoT services. To formulize the conceptual model for IoT process, more explicit standardization will be needed. Furthermore the new IoT perspective can be used to develop the fundamental method of the integration of human and IoT. By applying the new perspective of IoT, researchers may be able to predict properties of the future IoT and undiscovered elements.

Acknowledgments. This research was supported by the Ministry of Education, South Korea, under the Brain Korea 21 Plus Project (No. 10Z20130000013) and Basic Science Research Program (No. NRF-2014R 1A 1A2054531).

References

1. Adams, M.J., Edmond, D., Ter Hofstede, A.H.: The application of activity theory to dynamic workflow adaptation issues (2003)
2. Bandyopadhyay, D., Sen, J.: Internet of things: applications and challenges in technology and standardization. Wireless Pers. Commun. **58**(1), 49–69 (2011)
3. Bedny, G.Z., Harris, S.R.: The systemic-structural theory of activity: applications to the study of human work. Mind, cult. Act. **12**(2), 128–147 (2005)
4. Bertelsen, O.W., Bødker, S.: Activity theory. HCI Models, Theories, and Frameworks: Toward a Multidisciplinary Science, pp. 291–324 (2003)
5. Gubbi, J., Buyya, R., Marusic, S., Palaniswami, M.: Internet of Things (IoT): a vision, architectural elements, and future directions. Future Gener. Comput. Syst. **29**(7), 1645–1660 (2013)
6. Kuutti, K.: Activity theory as a potential framework for human-computer interaction research. Context and Consciousness: Activity Theory and Human-Computer Interaction, 17–44 (1996)
7. Nardi, B.A.: Context and Consciousness: Activity Theory and Human-Computer Interaction. MIT Press, Cambridge (1996)
8. Whitmore, A., Agarwal, A., Da Xu, L.: The internet of things—a survey of topics and trends. Inf. Syst. Front. **17**(2), 261–274 (2014)