72

A Knowledge-Based Advisor for Determination of Limits and Fits

C K Mok and S Y Wong
Department of manufacturing Engineering
City University of Hong Kong
Tat Chee Avenue
HONG KONG
Fax : (852) 788 8423

Abstract

The determination of limits and fits exists in nearly all engineering design works which involve mating parts. Their selection is a crucial process in achieving functional requirements and optimum cost of manufacture. This paper describes the development work of a prototype knowledge-based system (KBALF) capable of determining limits and fits. When relevant information for a given application is inputted, the system can help engineering designers through the whole process of determination of fits, ranging from recommendations of fits for assemblies, calculation of limits of sizes, to production of fit specification documents. By incorporating database of standard nominal sizes, the system also facilitates the process of standardization which in turn can reduce the cost of manufacture.

Keywords

Knowledge base system, limits and fits, CAD, standardization.

Q. Sun et al. (eds.), *Computer Applications in Production Engineering*

1. INTRODUCTION

The need for limits and fits for engineering parts was brought about mainly by inherent inaccuracy of manufacturing methods, coupled with the fact that `exactness' of size was found to be unnecessary for most workpieces. In order that functions should be satisfied, it was found sufficient to manufacture a given part so that its size lay within two permissible limits, i.e. a tolerance, this being the variations in size acceptable in manufacture. Similarly, when a specific fit condition is required between mating parts, it is necessary to ascribe an allowance, with positive or negative, to the basic size to achieve the required clearance or interference.

Almost all engineering design tasks involving assembly of parts necessitate the determination of limits and fits. The decision is an important process in achieving functional requirements and optimum cost of production. Thus the incorporation of an knowledge-based system in this aspect in a CAD system is deemed necessary.

2. FUNDAMENTALS OF LIMITS AND FITS

The fits between cylindrical parts are designated by custom as ` holes ' and `shafts ', in which case the term ` size ' refers to the diameter of the mating parts; whereas for non-cylindrical parts, it refers to a length width or other dimension.

The disposition of the tolerance zone for a HOLE relative to the basic size is denoted by a capital letter and the magnitude, or grade, of the tolerance by a suffix number, e.g., H7; whereas for a SHAFT , by a small letter and the magnitude, or grade, of the tolerance by a suffix number, e.g., p6. A fit is describe by a combination of symbols : H7-p6 or H7/p6.

3. SYSTEM DESIGN

3.1 Modular Approach

The present system is designed with an objective to provide the following functions related to limits and fits determination :-

(I) recommendations and explanations for fits for mating parts;
(ii) calculation of limits of sizes;
(iii) production of fit specification documents; and
(iv) auto-draughting routine to specify fits in tabular form as well as on assembly drawings.

In order to have a more flexible structure, make easier for modifications and facilitate for future expansions to cover other areas related to selection of limits and fits, such as in-house standardization, process capability, process selection, etc., all the aforesaid functions are designed under a modular approach. Fig. 1 shows the block diagram of KBALF.

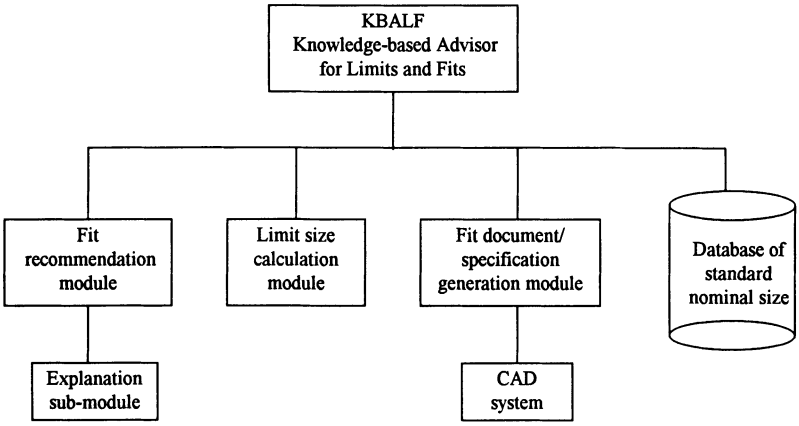

Fig. 1 Block diagram of KBALF

3.2 International Standard Used

The present must be designed on basis of an international standard as most companies adheres to some international standards.

The ISO Limits and Fits System was chosen as the basis for developing the system in view of the facts that it is the most widely used international standard fits can be selected with regard to part size. The ISO system provides a comprehensive ranges of limits and fits for engineering purposes. It is based on a series of tolerances graded to suit all classes of work from the finest to the coarsest. These tolerances are intended for most general applications and should be used whenever a graded series of tolerances is needed; and they are not restricted solely to diameters, although only cylindrical parts are referred to explicitly in the standard. They may also be applied to the width of a slot, the thickness of a key, etc., and to lengths, heights and depths. The range of fits provided by the standard is very comprehensive, but a guite small selection will satisfy most normal requirements.

3.3 Knowledge Domain

With a view to design a generalized system, various sources of knowledge have been taken into account for developing the knowledge domain of the knowledge-based system. The sources considered are as follows:-

(i) Publications
   a. International standards

b. Books on mechanical engineering design and engineering tolerances
c. Journal papers

(ii) Both authors have more than ten years experience in engineering design works.Their extensive experience and knowledge in this aspect are captured in the present system.

(iii) Other relevant knowledge acquired through discussions with designers of some major local companies.

4. SYSTEM DEVELOPMENT

4.1 Fit Recommendation Module

The four components of fit specifications are considered in the present system. Rules are then applied to suggest hole type, hole tolerance grade, shaft type and shaft tolerance grade individually. For example, hole type `H' is always used for the hole basis system. Shaft types are chosen according to the functional requirements of a given application. Tolerance grades are selected based on the precision level required.

BS4500 provides 28 types of standard Holes and Shafts and a series of tolerances grades, so as to cater for a wide range of applications. To use all 28 types of standard holes and shafts results in 784 (28 x 28) combinations of fits. Nevertheless, the fit conditions required for the majority of engineering products can be met by a quite limited selections of fit combinations. Thus it would cause serious problems in design, planning, purchasing, production, repair and maintenance ...etc resulting high cost on the products; if one uses all the fit combinations. In view of this the BS4500A recommends some selected Holes and Shafts as indicated below for general engineering applications :-

Selected Hole: H7, H8, H9, H11

Selected Shaft: c11, d10, e9, f7, g6, h6, k6, n6, p6 s6.

Standard fits are achieved by combination of the above selected holes and shafts. All the data of those holes and shafts are stored in the module in form of lists. Incorporated within this module, there is an explanation sub-module which can provide explanations for the reasoning behind a recommended fit and tolerance specification. This sub-module is important for training inexperienced designers, while experienced designers can skip it.

4.2 CAD Interface Module

In most cases, it is necessary to specify a number of fits of a given product or assembly on an assembly drawing as well as in a tabular form. This module was set up to connect the fit knowledge-based system with a CAD system to realize the aforesaid purposes. This module can automatically generate the fit specification drawings.

The present system is implemented on an IBM personal computer which is installed with the AutoCAD system. An interface program is needed to convert the results of the knowledge-based system to the CAD software for generating the fit specification drawings on location of the assembly drawing as specified by the designer. The AutoLISP which is specially provided for use with the AutoCAD system is adopted for writing the interface program. It is a modified version of the common A.I. language 'LISP'.

4.3 Limit Size Calculation Module

The limit size calculation module is used for calculating the limits of size of the mating parts for a fit such as maximum and minimum limits of size of the male part, maximum and minimum limits of size of the female part, and maximum and minimum clearance or interference of the fit based on data of standard tolerances and limit deviations included in ISO 286-1 & 2 : 1988.

5. SYSTEM OPERATIONS

5.1 Main Menu

The menu system is developed through a system of pull-down menus. The designer can pull down the menu from the tie bar and select the appropriate command from the pull-down menu. The layout of the menu system is shown in Fig. 2. Details of these menus are described in the subsequent paragraphs.

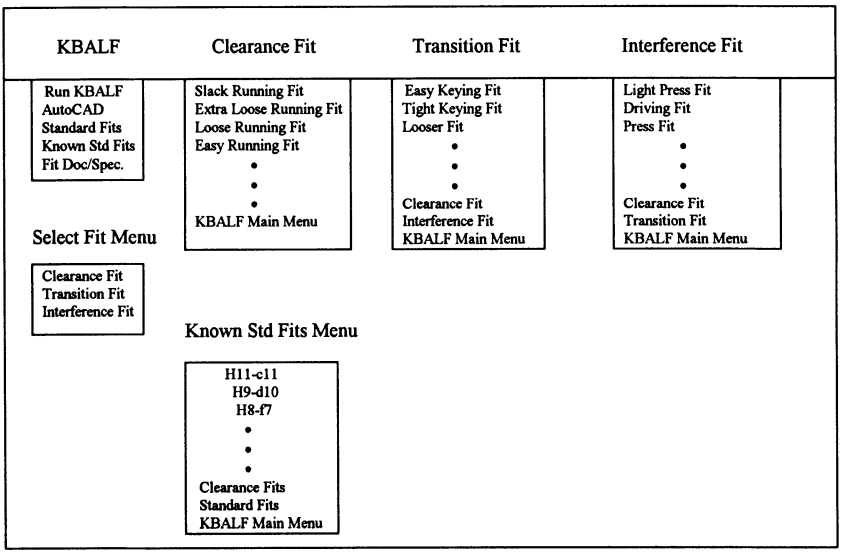

Fig. 2 Layout of KBALF Menu System

From left to right, the first pull down menu consists of two menus, KBALF, the main menu and Select Fit, its sub-menu. KBALF menu is the main menu to activate KBALF, flick back to AutoCAD menu and selections of fits menus. Select Fit menu enables the designer to select a standard fit among clearance fits , transition fits and interference fits.

The second pull down menu consists of Clearance Fit menu and Known Std Fits menu. Clearance Fit menu consists of a series of standard clearance fits such as slack running fit, extra loose running fit,..., etc. The last item KBALF Main Menu of this menu enables the designer to go back to KBALF main menu for other choices if he cannot find any suitable fit in this menu. The sub-menu 'Known Std Fits menu' provides a series of known standard fits in BS4500A system, such as H11-c11, H9-d10, H9-e9, ..., etc. for the designer to choose standard fits with which he is familiar. The last three items let the designer page between other menus.

The third pull down menu is Transition Fits which is for the selection of transition fits. The fourth full down menu is Interference Fits which is used for the design of interference fits. Through the menus system a designer can run the KBALF software and select appropriate fits according to BS4500A hole basis system.

5.2 Example

An example of the application of KBALF for a hydraulic cylinder is presented in this section. For this assembly the designer can determine the five fits with the help of KBALF. After the determination of fits is completed, a fit specification drawing can be produced on the assembly drawing as shown in Fig. 4. At the same time a fit document list can also be generated as shown in Fig. 5.

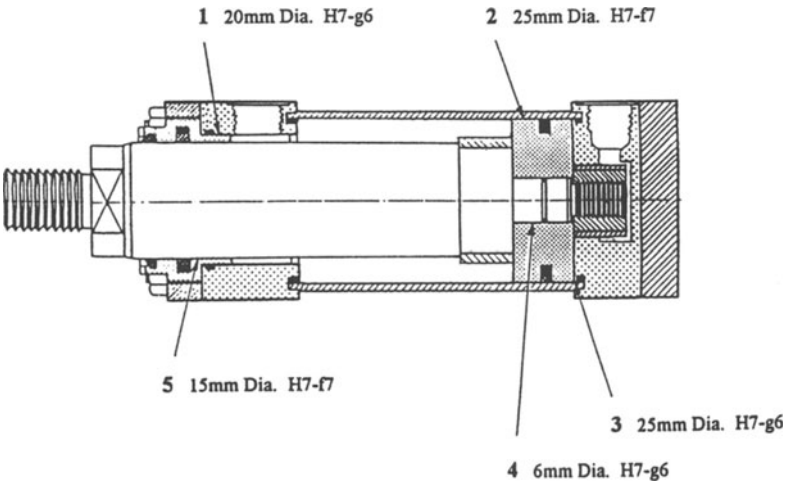

Fig. 4 A fit specification drawing for a hydraulic cylinder

5	Rod	Bush	H7-f7
4	Rod	Piston	H7-g6
3	Cap	Tube	H7-g6
2	Piston	Tube	H7-f7
1	Bush	Head	H7-g6
Item No.	**Male/Shaft Part**	**Female/Hole Part**	**Fit Specification**

Fig. 5 A fit document list for a hydraulic cylinder

6. CONCLUSIONS

A CAD-integrated 'knowledge-based system' capable of determining limits and fits has been developed using LISP in the AutoCAD environment. The present system can help engineering designers through the whole process of determination of fits, ranging from recommendation of fits for assemblies, calculation of limits of size, to generation of fit specification documents. This advisory system can also facilitate the process of standardization which in turn can reduce the cost of manufacture.

The modular approach provides a more flexible structure which can allow for easier modifications and knowledge enhancement. It also facilitates future expansions to cover other areas related to limits and fits, such as in-house standardization, process capability analysis, process selection, etc.

REFERENCES

[1] Autodesk, Inc., 'AutoCAD Release 12 Programmer's Reference Manual'.

[2] Autodesk, Inc., 'AutoLISP Release 12 Programmer's Reference Manual'.

[3] British Standards Institution, 'BS 4500 : ISO limits and fits', 1990.

[4] Oyvind, B., 'Computer-aided Tolerancing', ASME Press, NY, 1989.

[5] Greenwood, D.C., 'Product Engineering Design Manual', McGRAW-HILL.

AUTHORS' BIOGRAPHY

Mr Chiu-Kam MOK is Lecturer in the Department of Manufacturing Engineering.

Mr Seung-Yin WONG is former research graduate in the Department of Manufacturing Engineering.