Nobel Chile Jalapeño Sorting Using Structured Laser and Neural Network Classifiers

Federico Hahn and Rafael Mota
Tecnologico Regional de la Laguna
Blvd. Revolucion y Czda. Cuauhtemoc
27000 Torreon, Coahuila, Mexico
Tel (17)174702, fax (17)130970;
E-mail: Bandido@Cascabel.Ciad.Mx

ABSTRACT

Jalapeño chili is grown extensively in Mexico, as it is one of the main vegetables consumed by the population, having also a high demand for exportation. Chili classification is fundamental before arriving to the processing plants, grocery stores and supermarkets. A CCD camera imaged the product which travelled through the conveyor belt, but it was very slow, so a laser scanning system was used to obtain the chili length in order to sort it by sizes. A brief study of the main chili features was carried out, before training a random backpropagation neural network classifier. It was noted that the best topology required to know only the chili width and length sorting up to five different sizes with accuracies over 94%.

Keywords: Jalapeño chili, automatic sorting, chili imaging, neural network classifiers

1. INTRODUCTION

Inspection and sorting of fruit and vegetable becomes a very tedious work. The inspectors watch the vegetables, discriminating and sorting them depending on its quality, but the decisions are not always consistent between all the sorters. With the use of specialized vision systems, the main vegetable and fruit characteristics can be analyzed, together with its presence, predicting its status and size. Several algorithms using artificial intelligence and machine vision have been developed, evaluating potatoes (McClure and Wright, 1984), selecting carrots (Howard and Searcy, 1989), and classifying mushrooms (Heineman, 1991).

In Mexico, the chili is cultivated all around the country, as it is considered a basic nutricious product, which is consumed by almost all the population. Several chili varieties are grown throughout the country, and the jalapeño and serrano chili are the most popular ones with cultivars of more than 15,000 has. each. The total yield of jalapeño and serrano chili was of 114,000 and 168,246 tons, respectively, INIA (1982). The yield per year at the region known as "la Region Lagunera", had its peak efficiency on 1991, (Banco de Mexico, 1994).

The main quality features (INIA, 1982) considered for jalapeño chili are:

- ❑ Size between 6 and 8 cm;
- ❑ Weight of at least 10 grams;
- ❑ Conic form;
- ❑ Peduncle to avoid bacteria and fungi contamination;
- ❑ Brilliant green color.

Sixty percent from the chili production are processed, while 20% is sold as fresh vegetable in supermarkets and grocery shops. The other 20% is used to produce the "chipotle". Considering the high percentage that is used in the processing chili industry a neural network classifier was introduced for sorting the chili in up to five different classes.

2. MAIN CHILI IMAGE FEATURES

Automated machine vision systems require of a CCD camera capable of monitoring the main object. The vision system grabs the object, and checks whether it is under quality specifications. The use of machine vision systems are dependent on the kind of work, its efficiency, its capacity for viewing better than human eyes and its economic benefit. Typic agricultural applications, mentioned by Mota (1996) are:

- ❒ Sorting and classification of fruits and vegetables;
- ❒ Growth analysis and diseases on plants;
- ❒ Fruit picking robots;
- ❒ Weed control, planting and automatic recollection.

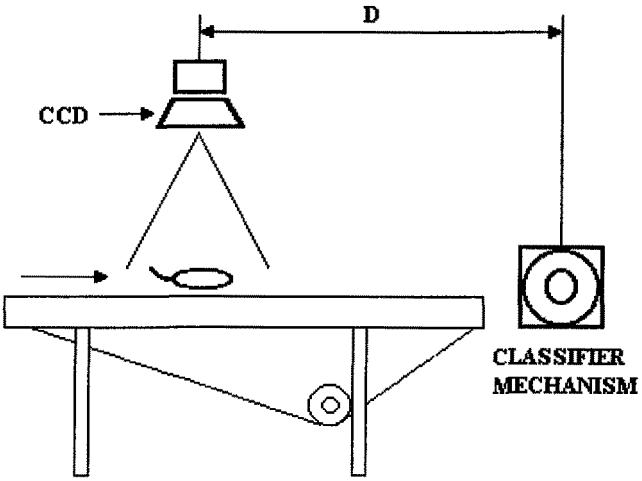

Figure 1. Automatic sorting of chili using a CCD camera.

This work shows the application of a machine vision system for automated chili sizing, where a CCD camera is held over the conveyor belt, Fig. 1, and from the acquired image a decision is taken by an automatic classifier. An ELECTRIM 1000, monochromatic, CCD camera was used for the application and its control board installed in an ACER 486-DX4 computer.

The main chili features were width and length and the object size was obtained with the image area or perimeter, as mentioned by Sarkar and Wolfe, 1985. In order to automatize the width measurement, it was

(a) (b)

Figure 2. Chili image with (a) frontal illumination; (b) back illumination (Pacheco, 1996).

always calculated at the centroid coordinate. The length measurement was taken without the peduncle, and for real analysis the measurement was stored when the width gradient between two consecutive noisy free readouts had a maximum. The image was prefiltered when frontal illumination was used, Figure 2.a., obtaining a sharper shade-free image with back illumination, Figure 2.b.

A total of 1000 chili were analyzed in order to extract the main features which resulted to be length, width, volume and weight. Considering volume the most consistent and confident feature for determining the size of a chili, and with the difficulties in measuring physically the area, regression studies were carried out between the mentioned variables. Mota (1996) encountered a r^2 coefficient of 0.9131 between length and volume. INIA (1982) recommended typical size classification based on length, width and weight, Table 1. Several of the features were used for training the algorithms and the area was obtained by multiplying width by length.

Table 1. Jalapeño chili classification based on length, diameter and weight.

Category	Length (cm)	Diameter (cm)	Weight (g)
Very small	Lower than 3.5	2.0	7.5
Small	3.5 a 4.5	2.5	10.5-14.0
Medium	4.5 a 5.5	3.0	14.0-21.0
Medium-big	5.5 a 6.0	3.5	21.0-25.0
Big	Bigger than 6.0	3.5	More than 25.0

3. STRUCTURED LASER CLASSIFIER

The basic chacaracteristics of a laser, makes it very usable for this type of applications. Its high monochromaticity, high coherence, luminosity per area and low diffraction were some of the parameters evaluated during its selection. Some photodiodes fixed in the other side of the band were able to send a signal which let the sorter to know the size of the chili. Figure 3, shows how all the elements were installed along the band.

It is interesting to note that the presence of a chili is detected through an infrared sensor and that if two chili are together certain radiation still arrives to the sensor, avoiding errors caused by the process. The inclination of the chili could cause an error during sorting, but mechanically with the use of sponges the chili was properly oriented.

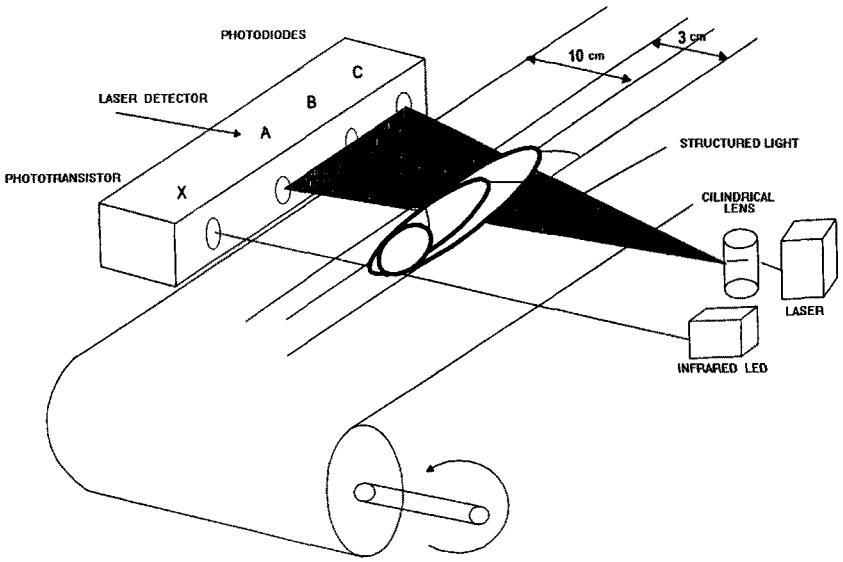

Figure 3. Laser used to classify chili by length

4. NEURAL NETWORK CLASSIFIERS

Discriminant analysis was carried out using the measured features together with some simple operations performed with them. Discriminant classifiers can be used, but a small variation in the population features can change drastically the classification constants, reducing its confidenciality. Introducing neural networks, (Hahn, 1994) brings several advantages including:

- ❒ Experience-based learning;
- ❒ Generalization;
- ❒ Graceful degradation;
- ❒ Fault tolerance.

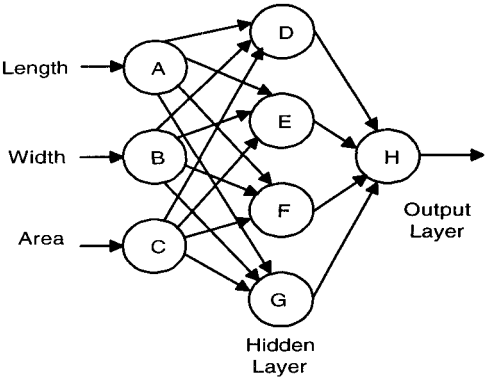

Figure 4. CHI neural network topology.

Neural networks have the ability to generalize, giving the right answer to entries not used during the training period and extracting the right tendency during contradictory and noisy events (Deck et al., 1991). Due to the type of application, a random backpropagation algorithm was used and several configurations tested. Although a simple topology of three input neurons, two hidden neurons and one output neuron was used by Hahn et al. (1996), to classify chili under different inclination degrees, another topologies were analyzed to sort chili in three, four or five size quantities without dropping the sorting efficiency. The final topology consisted of three input neurons connected to the length, width and area measurements, four hidden neurons and only one output neuron, Fig. 4. The area input was obtained by multiplying width by length.

5. RESULTS AND CONCLUSIONS

Thirty randomly oriented samples per class were used for training the backpropagation algorithm having as training constants an α and a L_{rate} of 0.9 and 0.1, respectively. A total of 150 chili were used as the trial group and the output sorted three different qualities (Table 2) achieving an average success rate of 99.92 %. No chili was missclassified at the first quality, and a higher discrimination accuracy could be achieved using a small hysteresis between groups.

Table 2. Discrimination accuracy of CHI neural network topology using three different chili sizes.

Image type	Discrimination accuracy (%)			
	First quality 7-10cm	Second quality 5-7cm	Third quality 3-5cm	Average
Random inclination	100	99.78	99.99	99.92

Table 3. Discrimination accuracy of CHI neural network topology using four different chili sizes.

Image type	Discrimination accuracy (%)				
	First quality 8-10cm	Second quality 6.5-8cm	Third quality 5-6.5cm	Fourth quality 3-5cm	Average
Random inclination	99.91	99.91	99.90	99.62	99.83

Table 4. Discrimination accuracy of CHI neural network topology using five different chili sizes.

Image type	Discrimination accuracy (%)					
	First quality 8-10cm	Second quality 7-8cm	Third quality 6-7cm	Fourth quality 5-6cm	Fifth quality 3-5cm	Average
Random inclination	94.19	94.28	94.05	94.20	94.12	94.17

Table 5. Comparison of the average success rates achieved under different sorting classes, together with the training epochs and minimum error for CHI neural network topology.

Classified in:	Epochs	Minimum error	Discrimination accuracy (%)
Three qualities	70,000	0.0968	99.92
Fourth qualities	70,000	0.0810	99.83
Five qualities	20,000	0.0583	94.17

The same training parameters and algorithms were used for sorting chili in four different qualities changing only the output constants during training. The average discrimination decreased to 99.83%, Table 3. Finally, the same test was carried using five different chili sizes, and an average success rate of 94.17% was obtained, Table 4. The efficiency reduction can be attributed to the smaller length spacing between qualities.

A comparison between the epochs required for training, minimum error and discrimination accuracy for each of the experiments carried out under different quality sets are shown in Table 5. It can be concluded that the neural network classifier can be used efficiently for sorting up to 5 different sizes. The epochs

required for converging, decreased with the number of qualities, as well as the minimum error achieved.

Although the neural network topology could work as well with images than with the scanner its speed was reduced and with the scanner more than 700 chiles could be sorted per minute, while in the other case the cost was implicit in the image speed. However, for low costing machines it was preferable to use the laser scanner.

6. ACKNOWLEDGEMENTS

We want to acknowledge all the staff in the Industrial Applications Laboratory, to Ing. F. Rafael and to Ing. Carlos Fuentes who developed the Sisvision software.

7. BIBLIOGRAPHY

Banco de Mexico (1994). Estadisticas en la produccion de vegetales, Mexico.

Deck, S., Morrow, C.T.,Heineman, P.H. and Sommer, H.J.(1991). Neural networks versus traditional classifiers for machine vision inspection. ASAE paper no. 91-3502.

Hahn, F. (1994). Crop, weed and soil discrimination by optical reflectance. PhD Dissertation at Edinburgh University, Scotland.

Hahn, F. and Zapata, J.L.(1996). Neural network classifier of jalapeno chile using imaging. Proc. of the Third International Conf. on Signal Processing ICSP'96, China.

Heineman, P. (1991). An automated mushroom inspection system using artificiall intelligence and machine vision. ASAE paper no. 91-7001. St. Joseph, MI 49085-9659, USA.

Howard, M., Searcy, S.W. (1989). Algorithms for grading carrots by machine vision. ASAE paper No. 89-7502. St. Joseph, MI 49085-9659, USA.

McClure, J.E. (1988). Computer vision sorting of potatoes. PhD. Dissertation in Agricultural Engineering. Penn State University. Pennsylvania, Pa, USA.

Mota, R. (1996). Seleccion automatica de chiles jalapeños por tamaño. Msc. Dissertation in Electrical Engineering. Tecnologico de la Laguna, Torreon, Mexico.

Pacheco, Y. (1996). Vision computarizada. Monografia para obtener el grado de Ingeniero en Electronica. Instituto Tecnologico de la Laguna, Torreon, Coahuila.

SARH (1982). Presente y pasado del chile en Mexico. Instituto Nacional de Investigaciones Agricolas, Mexico, D.F.

Sarkar, N., Wolfe, R. (1985). Feature extraction techniques for sorting tomatoes by computer vision, Trans. ASAE. 28(3):970-974.